AA 490 711
Stainless steel control knob

Vario 400 series control knob for use with VL 414 downdraft
AA 490

- For operation with 400 series AR400742 inline, AR401742 remote or AR413722 recirculation blower
- Solid stainless steel control knob
- Can be perfectly combined with other Vario 400 series products

Operation
Control knob with illuminated ring and output marking.

Features
3 electronically controlled output levels.
Intensive mode.
Delayed shut-off function.
Sensor-controlled operation of 400 series AR blowers if at least one VL 414 downdraft unit is open.

Planning notes
For positioning examples of the knob at any location between Vario cooktops, see planning notes on following page.
Note: when using two blowers, customers can choose to install one or two control knobs.
The separate electronics box needs to be installed so that it is accessible.

Possible combinations with the AA 490 control knob:
2x VL 414: 400 series AR400742 inline, AR401742 remote or AR413722 recirculation blower
1x VL 414: all 400 series AR blowers possible.
If a higher power requirement is needed for 1x VL414, a second blower can be added.
Multiple blowers can be operated via one AA 490 control knob at the same speed level.

Rating
Total rating: 150-520 W.
Total Amps: 4 A.
120 V / 60 Hz
Connecting cable 69" with plug.

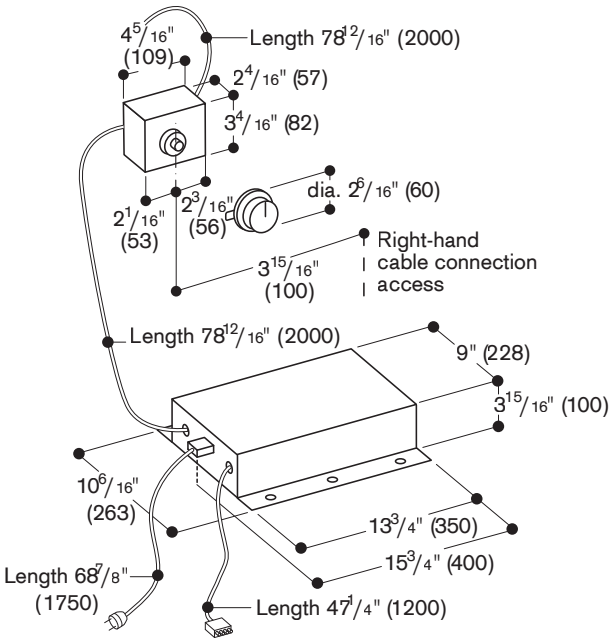

Numbers indicated inside parenthesis ( ) = mm