# BUILT-IN OVEN

GO470720 GO471720

GAGGENAU

**You can find additional information and explanations online.**
**Scan the QR code on the title page.**

# Table of contents


**1 IMPORTANT SAFETY INSTRUCTIONS ..... 4**
1.1 Safety definitions ..... 4
1.2 General information ..... 4
1.3 Safe use ..... 4
1.4 Child safety ..... 5
1.5 Safe use of the meat probe ..... 6
1.6 Cleaning function ..... 6
1.7 Proper installation and maintenance ..... 6
1.8 Remote operation ..... 7
1.9 State of California Proposition 65 Warnings ..... 7

**2 Preventing material damage ..... 8**
2.1 General information ..... 8
2.2 Core temperature probe ..... 8
2.3 Rotisserie spit ..... 9

**3 Environmental protection and energy-saving ..... 9**
3.1 Disposal of packaging ..... 9
3.2 Saving energy ..... 9

**4 Familiarizing yourself with your appliance ..... 9**
4.1 Appliance ..... 9
4.2 Oven cavity ..... 9
4.3 Interior lighting ..... 10
4.4 Control elements ..... 10
4.5 Types of heating ..... 13
4.6 Low power mode display ..... 15
4.7 Additional information ..... 16
4.8 Pop-up notifications ..... 16
4.9 Quick guides ..... 16
4.10 Cooling fan ..... 16
4.11 Automatic switch-off ..... 16
4.12 Wipe protection ..... 16
4.13 Proximity sensor ..... 16
4.14 Door lock ..... 16
4.15 Catalyzer heating ..... 16

**5 Functions in the Home Connect® app ..... 17**

**6 Accessories ..... 17**
6.1 Other accessories ..... 17
6.2 Sliding accessories into the oven cavity ..... 18

**7 Before using for the first time ..... 19**
7.1 Initial use ..... 19

**8 Basic Operation ..... 20**
8.1 Switching on the appliance ..... 20
8.2 Opening the appliance door ..... 20
8.3 Changing the type of heating ..... 20
8.4 Changing the temperature ..... 20
8.5 Displaying the current interior oven temperature ..... 20
8.6 Switching on the broiler and changing the broil setting ..... 20
8.7 Add broiler ..... 21
8.8 Opening the appliance door automatically after the cooking process ..... 21
8.9 Deactivating automatic appliance door opening ..... 21
8.10 Interrupting and continuing an operation ..... 21
8.11 Opening and closing the control center ..... 21
8.12 Switching the interior lighting on or off ..... 21
8.13 Switching off the appliance ..... 21
8.14 Switching on the appliance after automatic shut-off ..... 21
8.15 Displaying information ..... 22
8.16 Displaying appliance information ..... 22
8.17 Using the quick guides ..... 22

**9 Timer functions ..... 22**
9.1 Overview of the timer functions ..... 22
9.2 Call up the timer menu ..... 22
9.3 Exiting the timer menu ..... 22
9.4 Cooking time ..... 22
9.5 Cooking time end ..... 23
9.6 Count-up cooking timer ..... 23

**10 Sabbath mode ..... 24**
10.1 Opening the "Sabbath mode" function ..... 24
10.2 Selecting a time period for the "Sabbath mode" function ..... 24
10.3 Selecting the settings for the interior lighting while the "Sabbath mode" function is active ..... 24
10.4 Setting heating cycles ..... 24
10.5 Changing the time period for the "Sabbath mode" function ..... 25
10.6 Changing settings for the interior lighting ..... 25
10.7 Changing the heating cycle ..... 25
10.8 Deleting a heating cycle ..... 25
10.9 Starting the "Sabbath mode" function ..... 25
10.10 Switching off the "Sabbath mode" function ..... 25

**11 Manual door opening aid ..... 25**
11.1 Installing the manual door opening aid ..... 25
11.2 Opening the appliance door using the manual door opening aid ..... 26
11.3 Cleaning the manual door opening aid ..... 26
11.4 Removing the manual door opening aid ..... 26

**12 Child lock ..... 26**
12.1 Activating the childproof lock ..... 27
12.2 Deactivating the childproof lock ..... 27

**13 Rotisserie spit ..... 27**
13.1 Preparing the rotisserie spit ..... 27
13.2 Switching on the rotisserie spit ..... 29
13.3 Switching off and removing the rotisserie spit ..... 29
13.4 Inserting the handle ..... 29
13.5 Removing the food from the rotisserie spit ..... 29
13.6 Removing the handle ..... 30
13.7 Storing the rotisserie spit ..... 30

**14 Searing function ..... 30**
14.1 Starting the searing function ..... 30

14.2 Ending the searing function early ..... 30

**15 Favorites ..... 30**
15.1 Creating the first favorites ..... 31
15.2 Selecting a favorite ..... 31
15.3 Renaming a favorite ..... 31
15.4 Starting a favorite ..... 31
15.5 Changing a favorite ..... 31
15.6 Deleting a favorite ..... 31

**16 Programs ..... 31**
16.1 Automatic programs ..... 31
16.2 Recommended settings ..... 32

**17 Core temperature sensor ..... 33**
17.1 Inserting the core temperature probe into the food ..... 34
17.2 Turning the food ..... 34
17.3 Setting the core temperature probe ..... 35
17.4 Deleting the set core temperature ..... 35
17.5 Changing the set core temperature ..... 35
17.6 Core temperature guideline values ..... 35
17.7 Estimated cooking time ..... 36

**18 Home Connect® ..... 36**
18.1 Setting up Home Connect® ..... 36
18.2 Home Connect® settings ..... 37
18.3 Starting functions with the Home Connect® app via manual "Remote start" ..... 37
18.4 Starting functions with the Home Connect® app via permanently activated "Remote start" ..... 37
18.5 Using the Home Connect® app to change settings ..... 37
18.6 Switching the Wi-Fi on or off ..... 37
18.7 Displaying the "Sabbath mode" function with the Home Connect® app ..... 38
18.8 Deactivating the "Sabbath mode" function with programmed start time using the Home Connect® app ..... 38
18.9 Starting the "Sabbath mode" function using the Home Connect® app ..... 38
18.10 Software update ..... 38
18.11 Data Protection ..... 38

**19 Basic settings ..... 38**
19.1 Overview of the basic settings ..... 38
19.2 Changing the basic settings ..... 44

**20 Cleaning and maintenance ..... 44**
20.1 Cleaning agents ..... 44
20.2 Microfiber cloth ..... 45
20.3 Removing the shelf supports ..... 45
20.4 Fitting the shelf supports ..... 45
20.5 Cleaning the fully extendable telescopic pull-out rack ..... 46
20.6 Cleaning the rotisserie spit ..... 46

**21 Pyrolytic self-cleaning ..... 46**
21.1 Preparing pyrolytic self-cleaning ..... 47
21.2 Preparing the cleaning of accessories with the pyrolytic self-cleaning function ..... 47
21.3 Starting the pyrolytic self-cleaning function ..... 47
21.4 Stopping the pyrolytic self-clean ..... 47

**22 Troubleshooting ..... 47**
22.1 Malfunctions ..... 48
22.2 Display information ..... 48
22.3 Demo mode ..... 49

**23 Disposal ..... 49**
23.1 Disposal of your old appliance ..... 49

**24 How it works ..... 49**
24.1 General cooking tips ..... 49

**25 Customer Service ..... 51**
25.1 Model number (E-Nr.), production number (FD) and consecutive numbering (Z-Nr.) ..... 51
25.2 Rating plate location ..... 51

**26 Information regarding Free and Open Source Software ..... 52**

**27 STATEMENT OF LIMITED PRODUCT WARRANTY ..... 52**
27.1 What this warranty covers & Who it applies to ..... 52
27.2 How long the warranty lasts ..... 52
27.3 Repair/replace as your exclusive remedy ..... 52
27.4 Out of warranty product ..... 53
27.5 Warranty exclusions ..... 53
27.6 Obtaining warranty service ..... 53
27.7 Product information ..... 53

**Recursos y ayuda en línea en español ..... 55**

# IMPORTANT SAFETY INSTRUCTIONS
READ AND SAVE THESE INSTRUCTIONS

Read all of the instructions carefully before using the appliance. In order to reduce the risk of fire, electric shocks and personal injuries when using the appliance, follow the basic safety precautions, including the following safety instructions.

## 1.1 Safety definitions

Here you can find explanations of the safety signal words used in this manual.

**⚠ WARNING**
This indicates that death or serious injuries may occur as a result of non-observance of this warning.

**⚠ CAUTION**
This indicates that minor or moderate injuries may occur as a result of non-observance of this warning.

***NOTICE***
This indicates that damage to the appliance or property may occur as a result of non-compliance with this advisory.

**Note:** This alerts you to important information.

## 1.2 General information

Here you can find general information about this manual.

- Please read this manual carefully.
- Observe the safety instructions and warnings.
- Keep the manual and the product information in a safe place for future reference or for the next owner.
- Check the appliance for damage after unpacking it. Do not connect the appliance if it has been damaged in transit.

This appliance is intended for use up to a maximum height of 13,100 feet (4000 meters) above sea level.

## 1.3 Safe use

**WARNING**
When properly cared for, your new appliance has been designed to be safe and reliable.

- ▶ Read all instructions carefully before use. These precautions will reduce the risk of burns, electric shock, fire, and injury to persons.
- ▶ When using kitchen appliances, basic safety precautions must be followed, including those in the following pages.

**WARNING**
While cooking food items, small amounts of certain by-products, such as particulate matter / soot, can be released. To minimize exposure to these substances:

- ▶ Always ensure proper ventilation by using an appropriate ventilation fan or hood vented to the outside and/or an open window.
- ▶ Always operate the unit according to the instructions in this manual.

**WARNING**
Overheated materials can cause fire or burns and may produce potentially harmful smoke or fumes.

- ▶ To prevent overheating, turn ventilation hood ON when heating grease, fats or frying using medium to high heat settings.
- ▶ Avoid heating empty pots and pans.
- ▶ Do not allow pans to boil dry.
- ▶ Do not allow aluminum foil, plastic, paper, or cloth to come in contact with a hot surface element, burner, or grate.

**WARNING**
If materials inside an oven or warming drawer should ignite, keep door closed.

- ▶ Turn off the appliance and disconnect the circuit at the circuit breaker box.

A fire could occur during cooking.

- ▶ Always have a working smoke detector near the kitchen.
- ▶ Have an appropriate fire extinguisher available, nearby, highly visible and easily accessible near the appliance.

NEVER cover any slots, holes or passages in the oven bottom or cover an entire rack with materials such as aluminum foil.

- ▶ Doing so blocks air flow through the oven.
- ▶ Aluminum foil linings may also trap heat, causing a fire hazard.

Cooking fires can spread if extinguished incorrectly.

- ▶ Never use water on cooking fires.

Wear Proper Apparel.
Loose-fitting or hanging garments, such as ties, scarves, jewelry, or dangling sleeves, should never be worn while using the appliance.

- ▶ Tie long hair so that it does not hang loose.
- ▶ Secure all loose garments, etc. before beginning.

In the event that personal clothing or hair catches fire, drop and roll immediately to extinguish flames.
Do Not Use Water on Grease Fires.

- ▶ Smother fire or flame or use dry chemical or foam-type extinguisher.

**CAUTION**
The oven vents are important for air circulation. Covering the oven vents will cause the oven to overheat. Refer to the appliance overview for the location of the oven vents.

- ▶ Do not obstruct oven vents.

**WARNING**
Use Only Dry Potholders - Moist or damp potholders on hot surfaces may result in burns from steam.

- ▶ Do not let potholders touch hot heating elements.
- ▶ Do not use a towel or other bulky cloth.

DO NOT TOUCH HEATING ELEMENTS OR INTERIOR SURFACES OF OVEN - Heating elements may be hot even though they are dark in color. Interior surfaces of an oven become hot enough to cause burns.

- ▶ During and after use, do not touch, or let clothing, potholders, or other flammable materials contact heating elements or interior surfaces of oven until they have had sufficient time to cool. Other surfaces

# IMPORTANT SAFETY INSTRUCTIONS
READ AND SAVE THESE INSTRUCTIONS

of the appliance may become hot enough to cause burns. Among these surfaces are oven vent openings, surfaces near these openings and oven doors.

Use Care When Opening Door - Let hot air or steam escape before removing or replacing food.

- ▶ Standing to the side, open the door (or drawer) slowly and slightly to let hot air and/or steam escape.
- ▶ Keep your face clear of the opening and make sure there are no children or pets near the appliance.
- ▶ After the release of hot air and/or steam, proceed with your cooking.
- ▶ Keep doors shut unless necessary for cooking or cleaning purposes.
- ▶ Do not leave open doors unattended.

Do not clean the appliance while it is still hot. Some cleaners produce noxious fumes when applied to a hot surface. Wet clothes and sponges can cause burns from steam.

**CAUTION**

Use caution when cooking foods with high alcohol content (e.g. rum, brandy, bourbon) in the oven. Alcohol evaporates at high temperatures. There is a risk of burning as the alcohol vapors may catch fire in the oven.

- ▶ Use only small quantities of alcohol in foods, and open the oven door carefully.

Placement of Oven Racks - Always place oven racks in desired location while oven is cool. If the rack must be moved while the oven is hot, do not let potholders contact the hot heating elements in the oven. Use caution when removing oven racks from the lowest rack position to avoid contact with the hot oven door.

**WARNING**

Storage in or on Appliance - The use of corrosive chemicals in heating or cleaning will damage the appliance and could result in injury.

- ▶ Flammable materials, corrosive chemicals, vapors or non-food products should not be stored or used in an oven or on or near surface units.
- ▶ The appliance is specifically designed for use when heating or cooking food.

This appliance is intended for normal family household use only. It is not approved for outdoor use. See the Statement of Limited Product Warranty. If you have any questions, contact the manufacturer.

**WARNING**

Using this appliance other than for its intended use can cause fire or injury to persons.

- ▶ Use this appliance only for its intended use as described in this manual.
- ▶ NEVER use your appliances as a space heater for warming or heating the room. Doing so may result in overheating the appliance.
- ▶ Never use the appliance for storage.

**WARNING**

Do not heat or warm unopened food containers. Build-up of pressure may cause the container to burst and cause injury.

Failure to operate knobs properly may result in personal injury and damage to the appliance.

Cooking or roasting bags might explode.

- ▶ Follow the manufacturer's directions when using cooking or roasting bags.

**CAUTION**

To avoid possible injury or damage to the appliance, ensure oven rack is installed exactly per installation instructions and not backwards or upside down.

Do not place anything on the oven cavity bottom. Do not cover it with aluminum foil. A build-up of heat could damage the appliance or cause injury.

**WARNING**

Moisture intrusion may cause an electric shock.

- ▶ Do not use any steam cleaners or high-pressure cleaners to clean the appliance.

To avoid risk of injury from a damaged appliance or power cord, observe the following.

- ▶ Do not turn the power on if the appliance or the power cord is damaged. Doing so may cause injury.
- ▶ Never operate a damaged appliance.
- ▶ If the appliance or the power cord is damaged, immediately switch off the breaker in the circuit breaker box.
- ▶ Call Customer Service. →*Page 51*
- ▶ Repairs to the appliance should only be performed by an authorized service provider.

**WARNING**

Scratched glass in the appliance door may develop into a crack.

- ▶ Do not use any harsh or abrasive cleaners or sharp metal scrapers to clean the glass on the oven door, as they may scratch the surface.

**CAUTION**

To reduce the risk of contamination and damage:

- ▶ Always clean baking trays and wire racks before placing food on them.
- ▶ Inspect accessories for surface damage prior to use.

## 1.4 Child safety

This appliance is not intended for use by persons (including children) with reduced physical, sensory or mental capabilities, or lack of experience and knowledge, unless they have been given supervision or instruction concerning use of the appliance by a person responsible for their safety.

When children become old enough to use the appliance, it is the responsibility of the parents or legal guardians to ensure that they are instructed in safe practices by qualified persons.

# IMPORTANT SAFETY INSTRUCTIONS
READ AND SAVE THESE INSTRUCTIONS

**WARNING**
Do not allow children to use this appliance unless closely supervised by an adult.
- Children and pets should not be left alone or unattended in the area where the appliance is in use. They should never be allowed to play in its vicinity, whether or not the appliance is in use.

Do not allow anyone to climb, stand, lean, sit, or hang on any part of an appliance, especially a door, warming drawer, or storage drawer.
- This can damage the appliance, and the unit may tip over, potentially causing severe injury.

Do not let children play with the appliance.

**CAUTION**
Do not store items of interest to children in an appliance, in cabinets above an appliance or on the backguard of an appliance.
Children climbing on the appliance to reach items could be seriously injured.
Do Not Leave Children Alone.
- Children should not be left alone or unattended in the area where the appliance is in use.
- They should never be allowed to sit or stand on any part of the appliance.
- Always check inside the oven before turning it on.

**WARNING**
To avoid the risk of suffocation:
- Do not allow children to play with packaging material.
- Store small parts safely as they can be a choke hazard.

## 1.5 Safe use of the meat probe

**WARNING**
The oven interior and the meat probe become very hot.
- Use oven mitts to plug and unplug the meat probe.

**WARNING**
Use of a wrong meat probe can damage the insulation.
Use only the meat probe intended for this appliance.

## 1.6 Cleaning function

Follow these safety instructions when using the cleaning function.

**WARNING**
Do not block the oven vent(s) during the self-cleaning cycle. Always operate the unit according to the instructions in this manual.

**WARNING**
During the elimination of soil during self-cleaning, small amounts of carbon monoxide can be created and the fiberglass insulation could give off very small amounts of formaldehyde during the first several cleaning cycles.
- To minimize exposure to these substances, provide good ventilation with an open window, or use a ventilation fan or hood.

The oven heats up to a very high temperature during self cleaning. Opening the door can result in injury.
- When self-cleaning, confirm that the door locks and will not open.
- If the door does not lock, do not run Self Clean. Contact Customer Service.

**WARNING**
The outside of the appliance gets very hot when the cleaning function is in progress.
- Never touch the appliance door.
- Allow the appliance to cool down.
- Keep children at a safe distance.

**WARNING**
Do not leave food or cooking utensils, etc., in an oven during the pyrolytic self-cleaning mode of operation.

**CAUTION**
Remove broiler pans, pots, and other utensils and excess spillage before self-cleaning.

**CAUTION**
Birds have very sensitive respiratory systems.
- Keep pet birds out of the kitchen or other rooms where kitchen fumes could reach them.
- During self clean, fumes are released that may be harmful to birds.
- Other kitchen fumes such as overheating margarines and cooking oils may also be harmful.

**WARNING**
Do not clean the door gasket – The door gasket is essential for a good seal. Care should be taken not to rub, damage, or move the gasket.

**WARNING**
Do not use a protective coating to line the oven and do not use commercial oven cleaner.
Clean only parts listed in this manual.
Please note that some pets or humans can be sensitive to the odors created during the self-cleaning process whether it is a manufacturing residue burn off or food. It is recommended that those potentially affected be removed from the kitchen area during the self-clean process.

## 1.7 Proper installation and maintenance

**WARNING**
In the event of a malfunction, it might become necessary to turn off the power supply.
- Have the installer show you the circuit breaker or fuse. Mark it for easy reference.

To avoid electrical shock hazard, before servicing the appliance, turn power off at the service panel and lock the panel to prevent the power from being switched on accidentally.
Proper Installation - Improper installation or grounding can cause electric shock.
- This appliance must be properly installed and grounded by a qualified technician.
- Connect only to properly grounded outlet.
- Refer to installation instructions for details.

# IMPORTANT SAFETY INSTRUCTIONS
READ AND SAVE THESE INSTRUCTIONS

User Servicing - Do not repair or replace any part of the appliance unless specifically recommended in this manual.

- All other servicing should be referred to an authorized service provider.

**WARNING**
Grease and fat can ignite when heated.

- Keep the oven free from grease build up.

**CAUTION**
In the event of an error the display flashes and beeps continuously.

- Disconnect appliance from the power supply and call an authorized service provider.

**WARNING**
Malfunctions can cause injuries.

- Do not operate this appliance if it is not working properly, or if it has been damaged. Contact an authorized service provider.

## 1.8 Remote operation

**CAUTION**
This appliance may be configurable to allow remote operation at any time.

- Do not store any flammable materials or temperature sensitive items inside, on top or near surface units of the appliance.

## 1.9 State of California Proposition 65 Warnings

This product may contain a chemical known to the State of California, which can cause cancer or reproductive harm. Therefore, the packaging of your product may bear the following label as required by California:

**STATE OF CALIFORNIA PROPOSITION 65 WARNING:**

**⚠ WARNING**
Cancer and Reproductive Harm - **www.P65Warnings.ca.gov**

# 2 Preventing material damage

## 2.1 General information

***NOTICE***

Objects on the oven cavity floor will cause heat to build up. The baking and roasting times will no longer be correct and the enamel will be damaged.

- Do not place anything directly on the oven cavity floor.
- Do not cover the oven cavity floor with any sort of foil or baking parchment.

When the oven cavity is hot, any water inside it will create steam. The change in temperature that occurs as a result may cause damage.

- Never pour water into the oven cavity when it is still hot.
- Never place cookware containing water on the oven cavity floor.

The prolonged presence of moisture in the oven cavity leads to corrosion.

- Do not keep moist food in the closed oven cavity for extended periods of time.
- Do not store food in the oven cavity.

Fruit juice dripping from the baking tray leaves stains that cannot be removed.

- When baking very juicy fruit flans, do not pack too much on the baking tray.
- If possible, use the deeper universal pan.

If aluminum foil comes into contact with the door pane, it could cause permanent discoloration.

- Do not allow aluminum foil in the oven cavity to come into contact with the door pane.

Leaving the appliance to cool down with the door open will damage the front of adjacent units over time.

- Always allow the oven cavity to cool down with the door closed after cooking at high temperatures.
- Do not trap anything in the appliance door.
- Only leave the oven cavity to dry with the door open if a lot of moisture was produced during operation.

If the seal is very dirty, the appliance door will no longer close properly during operation. The fronts of adjacent units could be damaged.

- Always keep the seal clean.
- Never operate the appliance if the seal is damaged or missing.

Sitting or placing objects on the appliance door may damage it.

- Do not place, hang or support objects on the appliance door.
- Do not place any cookware or accessories on the appliance door.

With certain models, accessories may scratch the door panel when closing the appliance door.

- Always slide accessories into the oven cavity as far as they will go.

Carrying the appliance by the appliance frame may cause it to bend. The appliance frame cannot support the weight of the appliance.

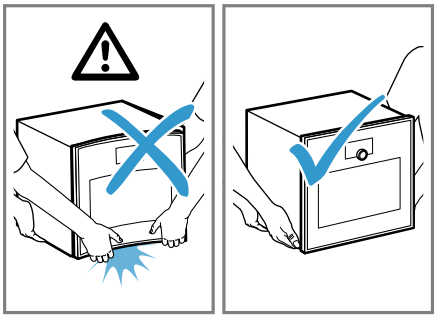

- Do not lift the appliance using the appliance frame.
- Always lift the appliance at the casing.

The heat during the pyrolytic self-cleaning may damage certain accessories.

- Do not clean the wire rack, rotisserie spit, cast iron roaster, baking stone, core temperature probe or other accessories using the pyrolytic self-cleaning function.
- Only clean GAGGENAU baking trays and grill trays with the pyrolytic self-cleaning function.

Using cleaning agents before the pyrolytic self-cleaning cycle may damage the cooking compartment and the glass on the appliance door.

- Before the pyrolytic self-cleaning cycle, do not use any cleaning agents in the cooking compartment or on the inside of the appliance door.

The oven's wire rack is not suitable for the combi-steam oven.

Corrosion may form on the oven's wire rack.

- Do not use the oven's wire rack in the combi-steam oven.

## 2.2 Core temperature probe

**WARNING**

An incorrect core temperature probe may damage the insulation.

- Only use the core temperature probe that is suitable for this appliance.

***NOTICE***

Temperatures above 480°F (250°C) damage the core temperature probe.

- Only use the core temperature probe in your appliance at a maximum temperature of 480°F (250°C).
- Do not use the core temperature probe with any broil heating mode.
- Before using a broil heating mode, remove the core temperature probe from the oven cavity.

You may damage the cable of the core temperature probe with the appliance door.

- Do not trap the cable of the core temperature probe in the appliance door.

The heat of the grilling surface may damage the core temperature probe.

- Ensure that the distance between the glass grilling surface and the core temperature probe and the cable of the core temperature probe is a few centime-

ters. In doing so, ensure that the meat can expand during the cooking process.

Aggressive cleaning agents may damage the core temperature probe.

- Do not clean the core temperature probe in the dishwasher.

### 2.3 Rotisserie spit

To prevent material damage to your accessory, observe the following information.

***NOTICE***

The heat in the oven causes damage to the handle of the rotisserie spit.

- Do not place the handle of the rotisserie spit in the oven.

Cleaning the rotisserie spit drive in the dishwasher can damage it.

- Do not clean the rotisserie spit drive in the dishwasher.

Temperatures above 480°F (250°C) damage the rotisserie spit.

- Only use the rotisserie spit in your appliance at a maximum temperature of 480°F (250°C).

# 3 Environmental protection and energy-saving

### 3.1 Disposal of packaging

The packaging materials are environmentally compatible and can be recycled.

- Sort the individual components by type and dispose of them separately.

### 3.2 Saving energy

If you follow these instructions, your appliance will use less power.

When cooking multiple dishes, do so in succession or in parallel.

✔ The oven cavity is heated after cooking the first dish. This reduces the heating-up time for the following dishes.

If the cooking time is relatively long, you can switch the appliance off 10 minutes before the cooking time ends.

✔ There will be enough residual heat to finish cooking the dish.

When operating with the "Bake with humidity", "Convection plus" and "Economy convection" type of heating, you can bake on several levels at the same time.

✔ This will save energy.

Use dark-colored or black-coated baking tins.

✔ These types of baking tin absorb the heat particularly well.

Open the appliance door as little as possible during operation.

✔ This maintains the temperature in the oven cavity and eliminates the need for the appliance to reheat.

# 4 Familiarizing yourself with your appliance

This Use and Care Manual covers several models. Your model may have some but not all of the features listed.

### 4.1 Appliance

Here you can find an overview of the parts of your appliance.

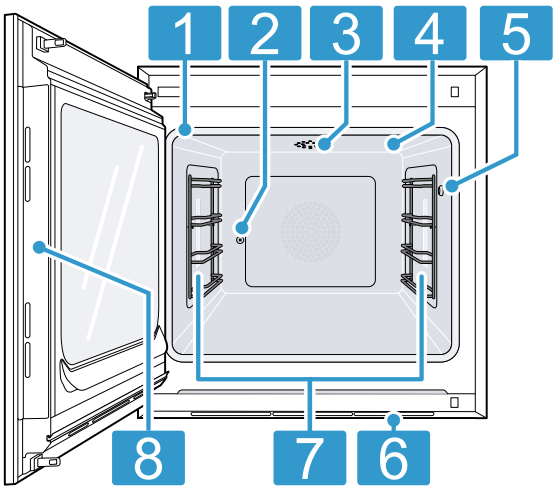


| | |
|---|---|
| 1 | Door seal |
| 2 | Rotisserie spit socket |
| 3 | Catalyzer heating |
| 4 | Broiling area |
| 5 | Connection socket for core temperature probe →*Page 33* |
| 6 | Ventilation slots |
| 7 | Interior lighting |
| 8 | Intended area for opening the door |

### 4.2 Oven cavity

The oven cavity has 4 shelf levels. Count the shelf levels from the bottom up.

**⚠ WARNING**

The inside of the appliance door becomes very hot during operation.

- During or after operation of the appliance, only touch the appliance door at the surface intended for this on the side.
- Always open the appliance door as far as it will go.

***NOTICE***
Objects on the oven cavity floor will cause heat to build up. The baking and roasting times will no longer be correct and the enamel will be damaged.
- Do not place anything directly on the oven cavity floor.
- Do not cover the oven cavity floor with any sort of foil or baking parchment.

The accessories may tip.
- Do not push the accessories between the shelf positions.

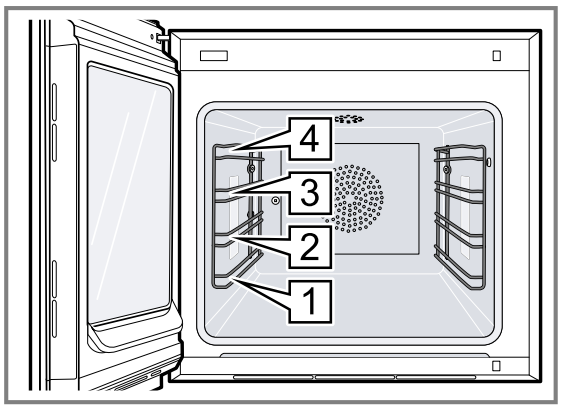


Shelf level 4 is not suitable for cooking.

## 4.3 Interior lighting

When you open the appliance door, the interior lighting switches on. If the appliance door remains open for longer than around 3 minutes, the interior lighting switches off.

**⚠ WARNING**
The light emitted by LED lights is very dazzling, and can damage the eyes (risk group 1).
- Do not look directly into the switched on LED lights for longer than 100 seconds.

You can also switch on the interior lighting when the appliance is in low power mode.

After approximately 20 minutes, the appliance switches the interior lighting off.
When you switch on the appliance, the appliance switches the interior lighting on.
→ *"Switching the interior lighting on or off", Page 21*
In most operating modes, the appliance keeps the interior lighting switched on.
You can specify whether the appliance will switch the interior lighting on during operation in the basic settings →*Page 38*. If you select the "Manual" setting in the basic settings, the appliance does not switch on the interior lighting automatically but you can switch on the interior lighting when required. After approximately 20 seconds, the appliance switches the interior lighting off.

## 4.4 Control elements

You can use the control panel to configure all functions of your appliance and to obtain information about the operating status.
On certain models, specific details may differ from those pictured.

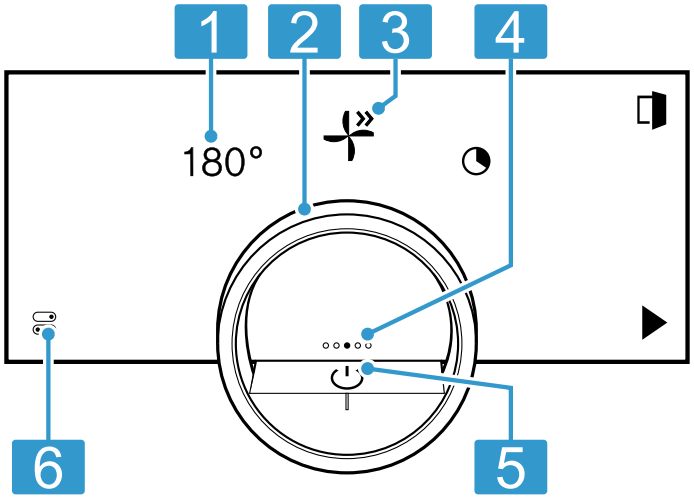


| | | |
|---|---|---|
| 1 | Symbols | Show settings, and start or end functions. |
| 2 | Control ring | Use the control ring to change the selection. |
| 3 | 12 o'clock position | The 12 o'clock position shows the value that is currently selected for a function, which you can change using the control ring. If required, press on another function, e.g. on the temperature or cooking time, to position this at the 12 o'clock position. |
| 4 | Position indicator | The filled point on the display in the middle of the control ring shows the current horizontal navigation position between the appliance displays. |

| | | |
|---|---|---|
| 5 | On/off button | Switch the appliance on and off. |
| 6 | Status bar & Control center | The status line shows the current status of functions or appliance components, e.g.:<br>▪ Home Connect® connection status<br>▪ Child protection<br>Press to open the control center →*Page 13*. |

## Control ring

Operation using the control ring is only possible when the appliance is switched on. You can use the control ring to navigate through the ring menus or the list menus and select settings.
When you touch the control ring, the display shows a ring in orange behind the control ring.

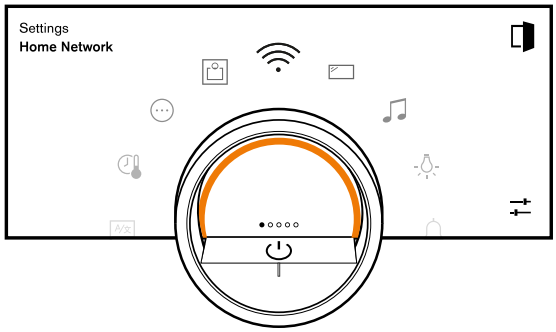


While operating the appliance, you can only use the control ring if you first select a function on the display.

| | |
|---|---|
| Turn | Navigate in ring menus and list menus:<br>▪ Turn the control ring to the right to increase the values.<br>▪ Turn the control ring to the left to decrease the values.<br>▪ Turn the control ring to the right or left quickly to change the values in larger increments. |

You can set how the control ring behaves in the basic settings →*Page 38*. In the "Standard" setting, press on the required function on the display and use the control ring to change the value of the function.
In the "Quick selection" setting, use the control ring, which is at the 12 o'clock position, to directly change the values for the function.

### Process visualization

For process visualization, the appliance shows a section of a circle in orange behind the control ring.

The appliance shows the section of a circle in orange behind the control ring under the following conditions:
- A cooking time is set.
- A core temperature is set for the core temperature probe.

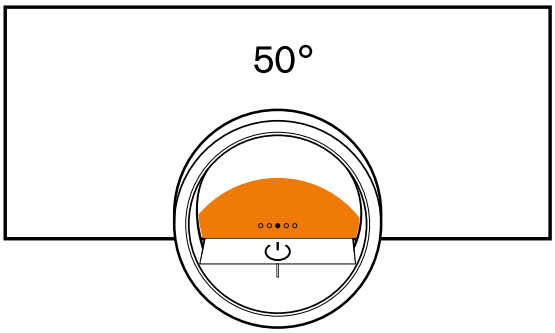


The section of the circle in orange becomes larger the longer the timer runs or the closer the core temperature of the food approaches the set core temperature.
If no cooking time and no core temperature are set, the section of the circle pulsates in orange.

## Display

The display shows the selected settings and setting options, as well as messages about the appliance's operating status.

| | |
|---|---|
| Press | Selects or confirms the procedure or function |
| Press and hold | Displays additional information |
| Swipe horizontally | Navigates between appliance displays<br>For example, in the "Manual" appliance display, swipe to the left or right<br>**Note:** You can only use the function if you are in an appliance display →*Page 12* and no program is running. |

**Note:** If no display language is available in your national language, select a display language that is available, e.g. English.

## Symbols

Use the symbols to start or stop functions, or to navigate in the appliance menu.

### Operation

| Symbol | Function |
|---|---|
| ⏻ | Switch the appliance on or off at the control ring |
| | Opening the appliance door →*Page 20* |

| Symbol | Function |
|---|---|
| | Open the control center →*Page 21* |
| | Edit settings |
| | Call up additional information →*Page 22* |
| | Save a favorite<br>→ *"Favorites", Page 30* |
| | Edit a favorite |
| | Deleting a favorite |
| | Tip for calling up programs →*Page 31* |
| | Start |
| | Pause or stop |
| | Switch to the next step |
| | Back or accept settings |
| | Next |
| | Confirm |
| | Delete |
| | Cancel |
| | Turning on the broiler |
| | Switching between the display for the preferred types of heating and the display of all available types of heating<br>→ *"Basic settings", Page 38* |

**Operation in the control center**

| Symbol | Function |
|---|---|
| | Opening the appliance door automatically after the cooking process →*Page 21* |
| | Activate child lock →*Page 26* |
| | Switch the interior lighting on or off →*Page 21* |

**Timer functions**

| Symbol | Function |
|---|---|
| | Call up the timer menu →*Page 22* |
| | Call up "Sabbath mode" →*Page 24* |
| | Deleting the heating cycle from "Sabbath mode" →*Page 25* |
| | Delaying the cooking time end →*Page 23* |

**Rotisserie spit**

| Symbol | Function |
|---|---|
| | Start and stop the rotisserie spit |

**Searing function**

| Symbol | Function |
|---|---|
| | Start →*Page 30* the searing function [1] or stop it early |

**Cleaning and maintenance**

| Symbol | Function |
|---|---|
| | Pyrolytic self-cleaning |

**Status**

| Symbol | Function |
|---|---|
| | Remote start →*Page 37* |
| | Core temperature probe is inserted<br>→ *"Core temperature sensor", Page 33* |
| | Core temperature probe is missing |
| | The rotisserie spit function is available |
| | Status display for the heating process |
| | Display of a cooling process |
| | Appliance is in demo mode →*Page 49* |

**Status in the control center**

| Symbol | Function |
|---|---|
| | Connection to the router: Strong<br>→ *"Home Connect®", Page 36* |
| | Connection to the router: OK<br>→ *"Home Connect®", Page 36* |
| | Connection to the router: Weak<br>→ *"Home Connect®", Page 36* |
| | No connection to the router.<br>→ *"Home Connect®", Page 36* |
| | Appliance connected to the router. No connection to the Home Connect server.<br>→ *"Home Connect®", Page 36* |
| | Software update status |

## Appliance displays

You can find an overview of the appliance displays here.

| Appliance displays | Usage | Navigation symbol |
|---|---|---|
| Settings | ▪ Adjusting the basic settings →*Page 38*<br>▪ Adjusting the Home Connect® settings →*Page 36* | ●○○○○ |
| Modes & Service | ▪ Starting the pyrolytic self-cleaning function<br>▪ Starting the quick guide →*Page 22* | ○●○○○ |
| Manual operation | Setting the temperature, type of heating and timer function | ○○●○○ |

[1] This function is currently unavailable.

| Appliance displays | Usage | Navigation symbol |
|---|---|---|
| Favorites | Calling up favorites →*Page 30* | ○○○●○ |
| Programs | Calling up automatic programs and recommended settings →*Page 31* | ○○○○● |

**Tip:** In the basic settings →*Page 38*, you can set which appliance menu your appliance starts in.

## Colors

The different colors are used to guide the user in the relevant setting situations.

| | |
|---|---|
| Red | ▪ Error messages for which you may need the help of customer service. |
| Orange | ▪ Information that you must observe so that you can continue to use your appliance<br>▪ Symbols for starting and stopping |
| White | ▪ Information<br>▪ Additional information |

## Appearance

Depending on the situation, the appearance of symbols, values or the entire display changes.

| | |
|---|---|
| Zooming in ring menus and list menus | When you use the control ring to select a list entry in a list menu, the display enlarges this list entry and displays it as underlined. When you use the control ring to select a value in a ring menu, the display shows this value enlarged in the 12 o'clock position. |
| Zoom at end of cooking or core temperature probe | A few minutes before the cooking process ends, the appliance shows the remaining cooking time enlarged in the center of the display. As soon as the current core temperature is just a few degrees below the set value, the display shows the current core temperature enlarged. |
| | All other displays are hidden. |
| Pared-down display | If the appliance does not detect a user in the immediate vicinity, the appliance reduces the amount of information shown on the display and only the most important information remains. This function is preset. You can change the setting in the basic settings →*Page 38*. |

## Control center

The control center ⊜ provides you with access to functions that are only visible in the status bar via symbols. You can activate or deactivate functions in the control center.

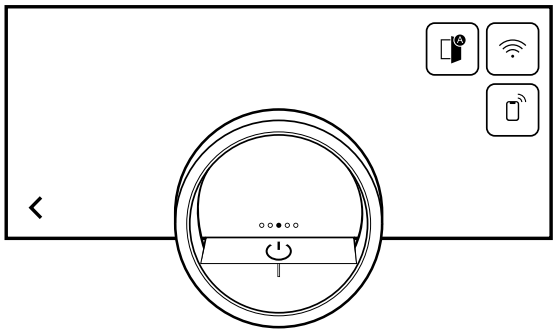

On the left-hand side, the display shows the symbols and texts with information on the current status of the appliance. On the right-hand side, the display shows the touch fields of the control center.

## 4.5 Types of heating

This is where you will find an overview of the types of heating. You will find recommendations for using the types of heating.

| Symbols | Function/type of heating | Temperature/setting | Use |
|---|---|---|---|
| | Convection plus | 122-570°F (50-300°C) | The heat that arises from the back wall of the oven is combined with top and bottom heat and is distributed quickly and optimally by the fan. For baking and cooking on one or more levels. For moist cakes, cookies, bakes, gratins, and meat. |

| Symbols | Function/type of heating | Temperature/setting | Use |
|---|---|---|---|
| | Economy convection | 122-480°F<br>(50-250°C) | Energy-saving mode in which the heat arises from the back wall of the oven cavity and is distributed quickly and evenly by the fan. Convenience functions such as interior lighting remain switched off and the temperature is only displayed during the heating phase. For baking on one level. For cakes, meat, bakes. No preheating is required. |
| | Bake with humidity | 122-480°F<br>(50-250°C) | The heat is distributed gently and the inherent moisture of the food is retained in the oven cavity to prevent it from drying out. For baking on one or more levels. For dry cakes, cookies, and gratins. |
| | Top + bottom heat | 122-570°F<br>(50-300°C) | Constant heat from above and below creates an ideal baking area and preserves the moisture in the food. Only suitable for baking on one level. For cakes, tarts, quiches. |
| | Top heat + 1/3 bottom heat | 122-570°F<br>(50-300°C) | Constant heat from above, combined with low heat from below. For additional baking time. For bakes, covered cakes. |
| | Top heat | 122-570°F<br>(50-300°C) | Constant heat, targeted from above. For meringues on fruit cakes. |
| | Bottom heat + 1/3 top heat | 122-570°F<br>(50-300°C) | Constant heat from below, combined with low heat from above. For lightly browned quiches and tarts, cheesecake, bread in loaf tins, dishes in a bain marie and braising without a lid. |
| | Bottom heat | 122-570°F<br>(50-300°C) | Constant heat, targeted from below. For cooking in a bain marie, boiling down or as additional baking time for moist fruit bases and quiches. |
| | Convection + bottom heat | 122-570°F<br>(50-300°C) | The heat arises from the back wall of the oven and is distributed quickly and evenly by the fan. Heat is also added from below. For moist cakes, fruit bases, cheesecakes. |
| | Convection + 1/3 bottom heat | 122-570°F<br>(50-300°C) | The heat arises from the back wall of the oven and is distributed quickly and evenly by the fan. Low heat is also added from below. For small cakes and tarts. |
| | Broil + circulated air | 122-570°F<br>(50-300°C) | Extremely intensive heat from above, which is distributed quickly and evenly by the fan. Guarantees that a crust is formed with simultaneous all-round heating. For meat, poultry, fish, vegetable skewers. No preheating is required. |

| Symbols | Function/type of heating | Temperature/setting | Use |
|---|---|---|---|
| | Broiler | low, medium, high<br>Default setting: 2, medium | Extremely intensive heat from above. Ideal for broiling and gratinating. For chicken legs (broil setting 1), vegetables (broil setting 2), strips of bacon and toast (broil setting 3). |
| | Baking stone function | 122-570°F<br>(50-300°C) | Optimal heating of the baking stone with extra-strong, targeted bottom heat. For crispy baked pizza, tarte flambée, bread and bread rolls. It can only be used in conjunction with the GAGGENAU baking stone (special accessory). |
| | Roaster operation | 122-430°F<br>(50-220°C) | Optimal heating of the roaster with bottom heat. For roasting, stews and casseroles. It can only be used for the Gaggenau cast iron roaster and in conjunction with the pull-out system [1] (special accessory). |
| | Air frying | 122-570°F<br>(50-300°C) | Extra-fast heat circulation in which the moisture is actively extracted from the cooking compartment. For extremely crispy results with little additional fat. For potatoes, poultry, meat, vegetables. Only in conjunction with the Gaggenau baking tray for hot-air frying (optional accessory). |
| | Drying [2] | 85-175°F<br>(30-80°C) | For drying thin slices of fruit or vegetables or herbs. When heat is circulating, moisture is actively extracted from the oven cavity. |
| | Dough proofing [2] | 85-120°F<br>(30-50°C) | Optimal temperature range for proving dough batches and pieces of dough. For yeast dough and sourdough. |
| | Keeping warm [2] | 120-195°F<br>(50-90°C) | Optimal temperature range for keeping food warm and preheating cookware. |
| | Defrosting [2] | 104-140°F (40-60°C) | Optimal temperature range for gently defrosting frozen food. For vegetables, fruit, cakes. |

## 4.6 Low power mode display

The appliance has different displays in low power mode. The displays depend on whether or not the appliance detects a user.
On the display without user detection, the appliance is switched off and the display is black. The appliance switches to low power mode without user detection if, when the appliance is switched on, you do not implement any settings for approx. 20 minutes or approx. 20 minutes after the appliance has completed a heating process.

If the proximity sensor detects a user or if you touch the control ring or press on the display, the appliance switches to low power mode with user detection.
In low power mode with user detection, the display shows the door opening symbol and the status bar. In the basic settings →*Page 38*, you can select whether the display also shows the GAGGENAU logo.
If the appliance is connected to the Home Connect® app, the display shows .
→ *"Home Connect®", Page 36*
The user detection distance depends on the selected basic settings.

[1] This function is currently unavailable.
[2] Do not preheat the appliance.

In low power mode with user detection, the display brightness is reduced. The brightness of the display depends on the viewing angle.

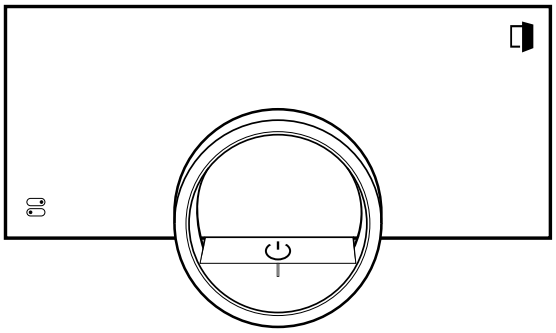

## 4.7 Additional information

If required, you can display additional information.
When you press on ⓘ, the display shows additional information about the current function.
When you press and hold certain symbols or values, the display shows additional information about the current function. Additional information is available for all symbols that are arranged around the control ring, e.g. information about the set type of heating or current interior oven temperature.
In the basic settings →*Page 38*, you can activate or deactivate the "Info-i" function.
The appliance also occasionally displays important information about safety and the operating status automatically. These messages disappear automatically after a few seconds, or when you press ✓ to confirm the message.
For messages about Home Connect®, the appliance also displays the Home Connect® status.
→ *"Home Connect®", Page 36*

## 4.8 Pop-up notifications

Pop-up notifications contain explanations about current functions.
In the basic settings →*Page 38*, you can activate or deactivate the "Pop-up hints" function.

## 4.9 Quick guides

Your appliance comes with a quick guide to help you with various topics.

## 4.10 Cooling fan

The cooling fan switches on when the appliance is in operation. The hot air escapes beneath the door.
After removing your food from the appliance, keep the door closed until the appliance has cooled down. The appliance door should not be left half open as this may damage adjacent kitchen units. The cooling fan continues running for a certain period of time after the appliance has stopped heating and then it switches itself off automatically.
Do not cover the ventilation slots. Otherwise, the appliance may overheat.

## 4.11 Automatic switch-off

For your protection, the appliance is equipped with an automatic shut-off function. The appliance switches off the heating process after 12 hours if you do not operate the appliance or program a cooking time during this time. The display shows a message.
If you set a cooking time, you can use the appliance for longer.
If you set a cooking time, you can operate the appliance in the "Drying" type of heating for a maximum of 72 hours, and in all other types of heating for a maximum of 24 hours.
When programming with the "Sabbath mode" function, the appliance switches off after up to 74 hours.

## 4.12 Wipe protection

Your appliance detects if you would like to clean the display or navigate between the appliance displays. The appliance locks the operation via the display and the control ring for a short time.
Press the display to return to the operation.

## 4.13 Proximity sensor

Your appliance detects whether you are in front of the appliance or moving towards it. Your appliance disregards if you are passing in front of it.
If you do not remain in the detection zone for the appliance when it is switched on, the appliance reduces the display to what is essential.

**Note:** You can set the distance at which the appliance can detect you in the basic settings. To ensure that the proximity sensor optimally detects the user, set the installation height of the appliance's upper edge in the basic settings →*Page 38*.

## 4.14 Door lock

The "Door lock" function prevents the appliance door from being opened accidentally. This is particularly useful when installing the appliance under the countertop.
In the basic settings →*Page 38*, you can activate or deactivate the "Door lock" function. When you activate the function and press ⍞, the display shows a slide control instead of the ⍞ symbol.
→ *"Opening the appliance door", Page 20*

## 4.15 Catalyzer heating

The catalyzer heating supports more effective elimination of odors.
In the basic settings →*Page 38*, you can switch the catalyzer heating on or off.
When you switch on the catalyzer heating, this reduces odor development.
To save energy, switch the catalyzer heating off.

# 5 Functions in the Home Connect® app

The Home Connect® app offers a range of functions and benefits.

- Monitor the cooking process, e.g. the remaining cooking time or the current core temperature.
- Start or stop a type of heating or program, or change the settings.
- Run important updates to the appliance software.
- Find the optimum settings or the optimum program for your recipe with the Oven Assistant function.
- View the estimated remaining cooking time when using the core temperature probe.
- Change the basic settings for the appliance.
- Operate the main functions via Voice Control (using Alexa or Google Home).
- Find the appliance information and instructions.
- Find new recipes.

# 6 Accessories

Only use genuine accessories. These are designed especially for your appliance.

**Note:** Accessories may become deformed if they get hot. Deformation has no effect on function. As the accessory cools down, it will regain its original shape.

The accessories supplied may differ depending on the appliance model.

| Accessories | | Use |
|---|---|---|
| Baking tray, enameled | 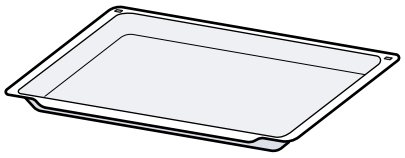 | ▪ Tray bakes<br>▪ Small baked items |
| Wire rack | 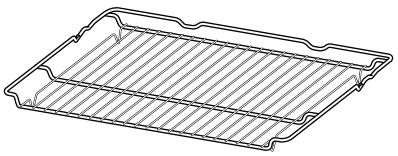 | ▪ Cookware<br>▪ Cake tins<br>▪ Ovenproof dishes<br>▪ Roaster |
| Broiling tray, enameled | 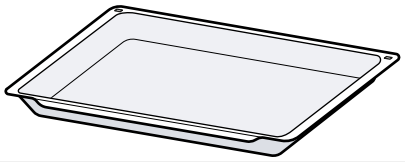 | ▪ Tray bakes<br>▪ Roaster |
| Core temperature sensor | 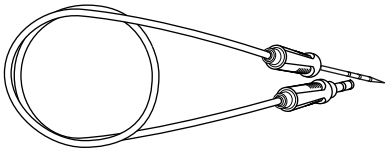 | Core temperature probe →*Page 33* for the highly precise cooking of:<br>▪ Meat<br>▪ Fish<br>▪ Poultry<br>▪ Bread |
| Rotisserie spit | 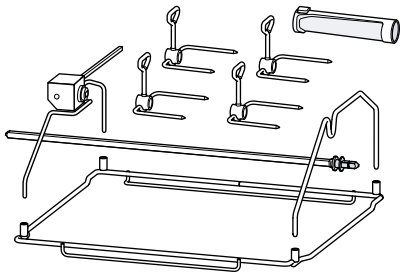 | Rotisserie spit for evenly cooking:<br>▪ Poultry<br>▪ Roaster |
| Manual door opening aid | 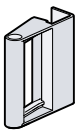 | Open the door without using the automatic door opening button, e.g. on the Sabbath. |

## 6.1 Other accessories

You can purchase other accessories from our Customer Service, specialist retailers or online.

You will find a comprehensive range of products for your appliance in our brochures and online: *www.gaggenau.com*

Accessories are appliance-specific. When purchasing, always check for compatibility with your appliance model number (E-Nr).
You can find out which accessories are available for your appliance in our online shop or from our Customer Service.

| Other accessories | Order number |
|---|---|
| Baking tray, enameled, 1⅛" (30 mm) deep | BA026116 |
| Broiling tray, enameled, 1½" (38 mm) deep | BA026117 |
| Wire rack | BA036166 |
| Baking tray for hot-air frying, perforated, enameled | BA020110 |
| Baking stone, baking stone supports, and pizza paddle | BA056134 |
| Pizza paddle | BS020003 |
| Core temperature sensor | BA010050 |
| Manual door opening aid | BA010050 |

## 6.2 Sliding accessories into the oven cavity

The accessories feature a rack stop function. The rack stop function prevents tilting of accessories when pulling them out. You must insert accessories in the oven cavity correctly so that tilt protection will work.

***NOTICE***
The accessories may tip.
- Do not push the accessories between the shelf positions.

1. Tilt the rack to guide the rack stop in between the rails of the rack holders ①. Lower the rack and slide it into the oven cavity, so that the rack stop can engage ②.

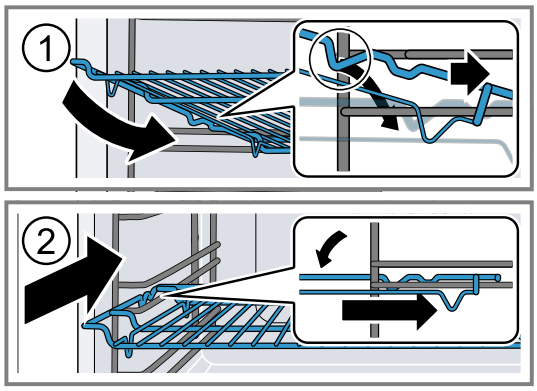


2. Make sure the rack's safety rail [a] is at the rear and top.

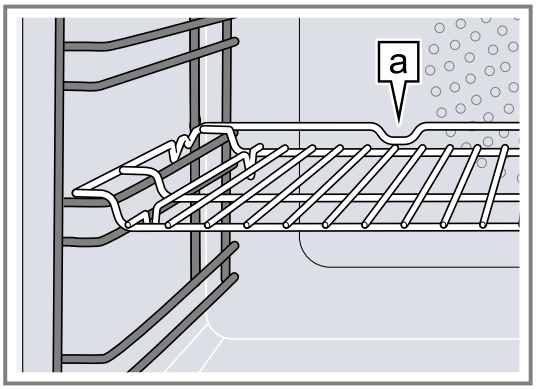


### Sliding the baking tray and wire rack together into the oven cavity

1. Correctly position the wire rack on the baking tray.

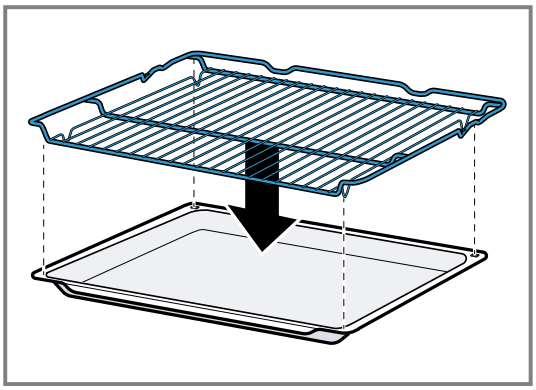

2. Slide the baking tray and wire rack together into the cooking compartment.

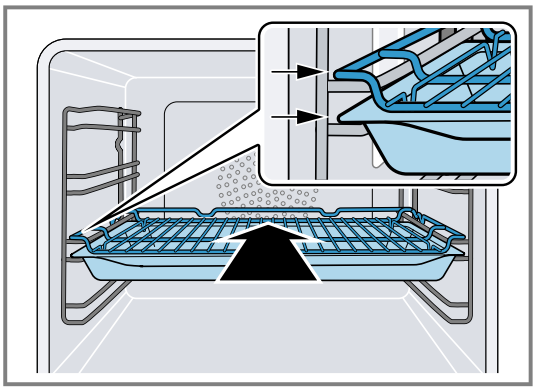

The wire rack slides over the current rack.

### Sliding the broiling tray and wire rack together into the oven cavity

1. Correctly position the wire rack on the broiling tray.

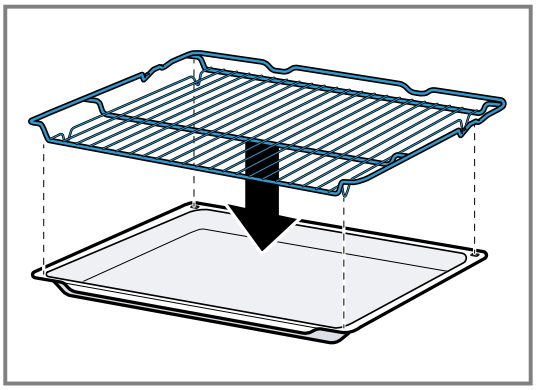

2. Slide the broiling tray and wire rack together into the cooking compartment.

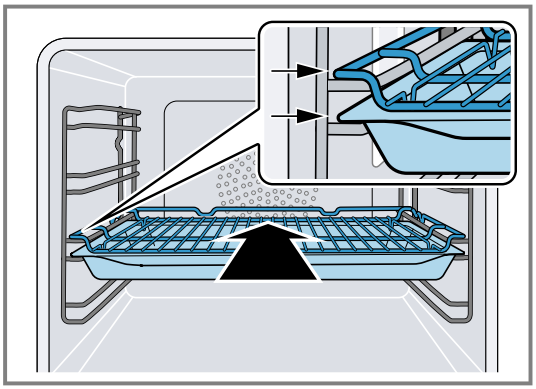

# 7 Before using for the first time

Apply the initial configuration settings. Clean the appliance and the accessories.

## 7.1 Initial use

Implement the settings for initial use before using your appliance.
First read the information under Safety.
The appliance must be installed and connected.
After connecting to the power supply, the appliance shows the "Initialization" display.
The appliance shows the "Initialization" display when it is first switched on after being connected to the power supply, if the initial start-up has not been completed successfully or the appliance has been restored to the factory settings.

Implement the following settings:
- Setting the language
- Activating Home Connect®
- Set the temperature unit
- Set the weight unit
- Setting the time format
- Set the time

You can retroactively change all of the settings in the basic settings →*Page 38*.
Follow the instructions in the display. The display guides you through the initial settings.

### Setting the language and implementing the remaining settings

1. Press .
✔ The display shows the preset language.
2. Use the control ring to select the required display language.
3. Press ✓ to confirm.
4. Press →.
5. Implement the remaining settings.
✔ The display shows the appliance display that is selected in the basic settings →*Page 38* as the start screen.

### Cleaning the door pane

**Note:** To ensure tightness, the door seal is lubricated at the factory. Residue may remain on the door pane.

▸ Before using for the first time, clean the door pane with glass cleaner and a window cloth or a microfiber cloth.
Do not use a glass scraper.

### Cleaning the accessories

▸ Before first use, clean the accessories thoroughly using hot soapy water and a soft cloth.

### Heating up the appliance

1. Ensure that there is no leftover packaging in the oven cavity.
2. Remove any accessories from the oven cavity.
3. To eliminate the new-appliance smell, heat up the empty appliance with the door closed.
The ideal setting for heating is 390°F (200°C) in the "Convection plus" type of heating for one hour.
4. Clean the appliance interior.

# 8 Basic Operation

## 8.1 Switching on the appliance

1. To exit low power mode →*Page 15*, press ⏻ on the appliance's control ring or in the Home Connect® app.
✔ The display shows a temperature, a symbol for the type of heating, and a symbol for the timer.
✔ The appliance switches the interior lighting on.
✔ ⏻ lights up orange.
2. Set the temperature, type of heating and cooking time that you require.

**Tip:** In the basic settings →*Page 38*, you can specify which appliance display appears on the display after the appliance is switched on and whether you want the interior lighting to switch on.

**Note:** If you do not implement any settings for an extended period, the display shows the appliance display that is selected in the basic settings →*Page 38* as the start screen, and then the low power mode display.

## 8.2 Opening the appliance door

**⚠ WARNING**
The inside of the appliance door becomes very hot during operation.
- ▸ During or after operation of the appliance, only touch the appliance door at the surface intended for this on the side.
- ▸ Always open the appliance door as far as it will go.

**⚠ WARNING**
Hot steam may escape when you open the appliance door. Steam may not be visible, depending on the temperature.
- ▸ Open the appliance door carefully.
- ▸ Keep children away from the appliance.

1. Press ⍞.
   - ▸ If the "Door lock" function is activated in the basic settings →*Page 38*, move the slide control to the other end.

✔ The appliance door opens automatically.
2. Only touch the appliance door at the designated area a and open it fully.

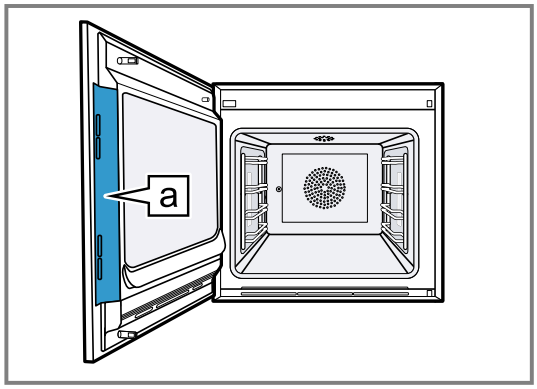


**Tip:** In the control center, you can set that the appliance door opens automatically after the current cooking process.
→ *"Opening the appliance door automatically after the cooking process", Page 21*

## 8.3 Changing the type of heating

**Note:** You can change the type of heating during operation.

1. Press the current symbol for the type of heating.
2. Use the control ring to select the required type of heating.
3. Press on the selected type of heating or <, or wait a few seconds.

✔ The display shows the selected type of heating and the suggested temperature.
✔ If you have previously used the type of heating, the display shows the last temperature that you used.
4. If required, change the temperature. →*Page 20*
5. If the display shows a notification window, follow the instructions in the notification window.
6. Press ▸ to start the operation.

## 8.4 Changing the temperature

**Note:** You can change the temperature during operation.

**Requirement:** The type of heating is selected.
→ *"Changing the type of heating", Page 20*

1. Press the temperature displayed.
2. Use the control ring to select the desired temperature.

✔ The display shows the temperatures that are available for the selected type of heating.
3. To change the previously stored appliance display, press the required temperature or <.
   If you do not use the appliance for an extended period, the display returns to the previously stored appliance display.

✔ The display shows the selected temperature.

**Note:** Once the operation has started, the display shows a progress bar below the selected temperature if the changed temperature is more than 20 °C higher than the previous temperature.

## 8.5 Displaying the current interior oven temperature

- ▸ Press and hold the set temperature.

✔ The display shows the current interior oven temperature.

**Note:** During continuous operation after heating up, slight temperature fluctuations are normal.

## 8.6 Switching on the broiler and changing the broil setting

**Note:** The core temperature probe cannot be used in combination with the "Broiler" type of heating.

1. Press ⍞.

2. Use the control ring to select the "Broiler" type of heating.
3. Press .
✔ lights up.
✔ The display shows the symbol for the broil setting instead of the temperature.
4. Press .
5. Turn the control ring to select the broil setting.
6. Press <.
7. If required, set the cooking time →*Page 22*.
8. Press ▶ to start the operation.
✔ The display shows the type of heating, the broil setting and the cooking time or cooking time end.

## 8.7 Add broiler

You can brown or gratinate your food using the broiler. The "Add broiler" function is available for most types of heating, except for "Broiler", "Broil + circulated air", "Roaster operation", "Drying", "Dough proofing", "Keeping warm" and "Defrosting".
The "Add broiler" function is not available until a temperature of 150 °C is reached.
After around 3 minutes, the appliance switches the broiler off. If required, you can switch the broiler on again.

### Turning on the broiler

***NOTICE***
Temperatures above 480 °F (250 °C) damage the core temperature probe.
▸ If you use the core temperature probe, never place the food on the top shelf level.

1. Use the control ring to select the required type of heating and start the operation.
The "Add broiler" function is not available for all types of heating.
2. Press .
✔ lights up.
✔ The appliance switches the grill off for approx. 3 minutes.

### Deactivating the broiler

**Requirement:** lights up orange.
▸ Press .
✔ lights up white.
✔ The broiler is deactivated.

## 8.8 Opening the appliance door automatically after the cooking process

The "automatic door opening" function at the end of the cooking process is only valid for the current cooking process.

**⚠ WARNING**
The appliance and its parts that can be touched become hot during use.
▸ Young children under 8 years of age must be kept away from the appliance.
▸ Ensure that young children are not in the vicinity of the appliance when the appliance door opens automatically.

**Note:** Use the "automatic door opening" function at the end of the cooking process only if required to prevent the food from being overcooked or burning.
In order to reduce the amount of moisture deposited on the unit fronts, open the appliance door fully after the cooking time has elapsed if possible.

1. Press .
2. Press .
✔ The display shows .
✔ The appliance opens the appliance door automatically after the current cooking process with a set cooking time end or set core temperature.

**Notes**
- The appliance door also opens when the child lock →*Page 26* is activated or the door lock →*Page 16* is activated.
- Automatic appliance door opening is not available in combination with the rotisserie spit.

## 8.9 Deactivating automatic appliance door opening

1. Press .
2. Press .
✔ The display shows .
✔ Automatic appliance door opening after the cooking process is deactivated.

## 8.10 Interrupting and continuing an operation

1. To interrupt the operation, press ■.
2. To continue the operation, press ▶.

## 8.11 Opening and closing the control center

1. Press to open the control center.
✔ The appliance shows a description above the functions currently active.
2. To activate or deactivate a function as required, press the symbol for the function.
3. Press < to close the control center.
✔ A pop-up message →*Page 16* tells you if a function has been activated.

## 8.12 Switching the interior lighting on or off

1. Press .
2. Press .

## 8.13 Switching off the appliance

▸ Press ⏻ on the control ring.
✔ The appliance switches to low power mode.

## 8.14 Switching on the appliance after automatic shut-off

**Requirement:** After prolonged operation, the automatic shut-off →*Page 16* switches off the appliance.
▸ Press ⏻ on the control ring.

### 8.15 Displaying information

- ▸ Press ⓘ.
- ✔ The appliance displays information about the selected function.
  → *"Additional information", Page 16*

### 8.16 Displaying appliance information

1. Swipe repeatedly from left to right until the display shows "Modes & Service".
- ✔ The display shows the available functions in a list menu.
2. Use the control ring to select the "Appliance information" function.
3. Press "Appliance information".
- ✔ The display shows the appliance information, e.g. the E-number and the serial number.
4. Press < to exit the display.

### 8.17 Using the quick guides

1. Select the "Modes & Service" appliance display.
   → *"Appliance displays", Page 12*
2. Use the control ring to select "Quick guide", then release the control ring.
3. Select the required quick guide and view it.

# 9 Timer functions

Your appliance has different timer functions, with which you can control its operation.

### 9.1 Overview of the timer functions

Use ◔ to select the different timer functions.

| Timer function | Usage |
|---|---|
| ◔ | Cooking time |
| →I | Cooking time end |

A cooking time or cooking time end can only be set in combination with a type of heating.
The "Cooking time" and "Core temperature probe" functions are not available at the same time.

### 9.2 Call up the timer menu

- ▸ Press ◔.
- ✔ The display shows "h" and "min" for hours and minutes.
- ✔ The display shows the display for the minutes enlarged in the 12 o'clock position.

### 9.3 Exiting the timer menu

- ▸ Press < or press on the selected cooking time to switch to the previously stored appliance display.
- ✔ The timer menu is closed.

### 9.4 Cooking time

When you set the cooking time for your food, the appliance automatically switches off after this time. The maximum possible cooking time depends on the set type of heating.
For most types of heating, you can set a cooking time of 1 minute up to 24 hours.
For the "Drying" type of heating, the maximum cooking time is 72 hours.
You can change the type of heating and temperature while the cooking time counts down.

#### Setting the cooking time

**Requirement:** No core temperature is set. You cannot use the "Cooking time" and "Core temperature probe" functions at the same time.

1. Place the food in the oven cavity.
2. Press ◔.
- ✔ The display shows h : min for hours and minutes.
3. Press the required value and use the control ring to change the value.
   - ▸ Turn the control ring slowly to change the value in smaller increments.
   - ▸ Turn the control ring quickly to change the value in greater increments.

   The maximum possible cooking time depends on the type of heating.
- ✔ The appliance automatically calculates the time for the cooking time end.
4. Press < or press on the selected cooking time to switch to the previously stored appliance display.
   If you do not use the appliance for an extended period, the appliance saves the settings and the display returns to the previously stored appliance display.
- ✔ If the appliance is in operation, the appliance shows the temperature, the operating mode, and the remaining cooking time.
- ✔ 3 minutes before the end of the cooking time, the display zooms in on the remaining cooking time.
- ✔ After the cooking time has elapsed, the display shows 00:00 and a signal tone sounds.
5. Turn the control ring or open the appliance door.
   The appliance door opens automatically if you have activated this function.
   → *"Opening the appliance door automatically after the cooking process", Page 21*
- ✔ The signal tone stops.

**Note:** If there is no further operation following the signal tone, the display shows the "Downtime timer" function with the + symbol. The display shows how much time has elapsed since the cooking time ended. After approx. 20 minutes without any further operation, the appliance switches to low power mode.

#### Changing the cooking time

**Requirement:** You have set a type of heating and a temperature.

1. Press ◔.
- ✔ The display shows h : min for hours and minutes.
2. Press the required value and use C to delete the value, or use the control ring to change the value.
   - ▸ Turn the control ring slowly to change the value in smaller increments.

- ▸ Turn the control ring quickly to change the value in greater increments.

The maximum possible cooking time depends on the type of heating.

✔ The appliance automatically calculates the time for the cooking time end.

3. Press < or press on the selected cooking time to switch to the previously stored appliance display.
   If you do not use the appliance for an extended period, the display returns to the previously stored appliance display.

✔ The display shows the temperature, the type of heating, the remaining cooking time, and the cooking time end.

### Deleting the cooking time

**Tip:** In the "Manual" appliance display, double-click on the cooking time in order to delete the cooking time without switching to the timer settings.

1. Press ◔.

✔ The display shows h : min for hours and minutes.

2. Press the required value and use C to delete the value.

✔ The display shows –:–.

3. Press < or press on the selected cooking time to switch to the previously stored appliance display.
   If you do not use the appliance for an extended period, the display returns to the previously stored appliance display.

✔ The display does not show a cooking time.

## 9.5 Cooking time end

As soon as you set a cooking time, the display shows the cooking time end. You can delay the cooking time end by a maximum of 12 hours.
For example, if you set a cooking time of 90 minutes at 10 a.m., you can delay the end of the cooking time so that the cooking process ends at 11.30 p.m. at the latest.
For most types of heating, the maximum cooking time is 24 hours.
For the "Drying" type of heating, the maximum cooking time is 72 hours.
Bear in mind that food which spoils easily should not be left in the appliance for too long.

### Delaying the cooking time end

**Requirement:** No core temperature is set. You cannot use the "Cooking time" and "Core temperature probe" functions at the same time.

1. Place the food in the oven cavity.
2. Press ◔.

✔ The display shows h : min for hours and minutes.

3. Set the cooking time. →*Page 22*

✔ The appliance automatically calculates the time for the cooking time end.

4. Press < or press on the selected cooking time to switch to the previously stored appliance display.
   If you do not use the appliance for an extended period, the display returns to the previously stored appliance display.
5. Press on the cooking time end.
6. Use the control ring to set the required cooking time end.
7. Press ▶.

✔ The appliance switches to standby.
✔ The display shows the temperature, the type of heating, and the cooking time end.
✔ If the end of cooking time is one or more days in the future, the display shows "+1d".
✔ The appliance starts at the calculated time and automatically switches off once the cooking time has elapsed.
✔ After the cooking time has elapsed, the display shows 00:00 and a signal tone sounds.

8. Turn the control ring or open the appliance door.
   The appliance door opens automatically if you have activated this function.
   → *"Opening the appliance door automatically after the cooking process", Page 21*

✔ The signal tone stops.

**Note:** If there is no further operation following the signal tone, the display shows the "Downtime timer" function with the + symbol. The display shows how much time has elapsed since the cooking time ended. After approx. 20 minutes without any further operation, the appliance switches to low power mode.

### Resetting the delay of the cooking time end

**Note:** In the "Manual" appliance display, double-click on the cooking time end in order to reset the delay of the cooking time end without switching to the timer settings.

**Requirement:** You have used the control ring to manually set the cooking time end.

1. Press →|.
2. To reset the delay of the cooking time, press ↺.

✔ The appliance calculates the cooking time end based on the cooking time.
✔ The display shows the cooking time end.

3. Press < or press on the cooking time end to switch to the previously stored appliance display.
   If you do not use the appliance for an extended period, the display returns to the previously stored appliance display.

## 9.6 Count-up cooking timer

If no cooking time is set, the display shows the time that has elapsed since the start of the process.
In the basic settings, you can switch the "Count-up cooking timer" function on or off.

### Reset "Count-up cooking timer"

1. Press and hold ◔.
2. Press ↺.

✔ The "Count-up cooking timer" function is reset.

# 10 Sabbath mode

You can use this function to keep food warm and cook food for up to 74 hours without having to switch the appliance on or off. You can select the "Top + bottom heat" type of heating or "Convection" type of heating, the temperature and the required cooking time.
Bear in mind that food which spoils easily should not be left in the appliance for too long.
You can use the "Sabbath mode" function to program 9 different heating cycles with a total cooking time of 74 hours. Set a start time and an end time. The display shows which settings have been selected.
You can define whether the interior lighting is switched on or switched off during the selected cooking time.
At the end of the selected cooking time, the appliance automatically deactivates the function. If required, you can deactivate the "Sabbath mode" function at any time using the on/off button ⏻.
If the "Sabbath mode" function is active, the display screen does not change when you approach the appliance.
If the "Sabbath mode" function is active, you cannot operate the appliance via the display and the control ring and you can only open the door manually using the manual door opening aid. Install the manual door opening aid before the Sabbath.
If the "Sabbath mode" function is active, the "Automatic door opening at the end of the cooking process" function is not available.
If the "Sabbath mode" function is active and you open the appliance door, the appliance ends the heating operation after a randomly selected time of approx. 20 to 30 seconds. If you close the appliance door again, the appliance starts the heating operation after a randomly selected time of approx. 20 to 30 seconds. To avoid interrupting the heating operation, only open the appliance door between two heating operations.

## 10.1 Opening the "Sabbath mode" function

**Requirement:** The "Sabbath mode" function is set to "On" in the basic settings →*Page 38*.

1. Swipe repeatedly from left to right until the display shows "Modes & Service".
2. Use the control ring to select the "Sabbath mode" function.
3. Set the switch to the right of the "Sabbath mode" list entry to "On".

✔ The display shows the start time and the end time.

## 10.2 Selecting a time period for the "Sabbath mode" function

**Requirement:** The "Sabbath mode" function is set to "On" in the basic settings →*Page 38*.

1. Press the start time.
2. Use the control ring to change the start time.
3. Press <.

✔ The appliance automatically calculates the time for the end time.
✔ The display shows the start time and the end time.

4. Press the end time.
5. Use the control ring to change the end time.

✔ The display shows the start time and the end time.

6. Press ✓ to confirm.

✔ The display shows ⏲.

**Note:** If you set a delayed start time for the "Sabbath mode" function, you can only start cooking processes with a programmed end time.
The following functions are not available:

- Pyrolytic self-cleaning
- Some cooking programs
- Cooking processes with a set core temperature
- Cooking processes without a cooking time end

## 10.3 Selecting the settings for the interior lighting while the "Sabbath mode" function is active

**Requirement:** A start time and an end time are selected.

→ *"Selecting a time period for the Sabbath mode function", Page 24*

1. Press →.
2. To switch the interior lighting on at the lowest lighting level for the entire cooking time while the "Sabbath mode" function is active, set the switch for the interior lighting to "On".
3. To switch the interior lighting off for the entire cooking time while the "Sabbath mode" function is active, set the switch for the interior lighting to "Off".

✔ The display shows the start time and the end time.

4. To program the first heating cycle, if needed, press +.
→ *"Setting heating cycles", Page 24*

## 10.4 Setting heating cycles

1. Press ⏲.

✔ The display shows the settings that have been selected for the "Sabbath mode" function.

2. Press "Summary".
3. Press ←.
4. Press +.
5. Press the temperature to set it.
   ▸ Use the control ring to select the required temperature and press <.
6. Press the current symbol for the type of heating to set the type of heating.
   ▸ Use the control ring to select the required type of heating and press <.
7. To change the start time, press the start time.
   ▸ Use the control ring to change the start time and press <.
8. To change the end time, press the end time.
   ▸ Use the control ring to change the end time and press <.

✔ The display shows the settings for the first heating cycle.

9. Press ✓ to confirm.

10. To program a further heating cycle, if needed, press +.
    ▸ Program the settings for the further heating cycle. You can program up to 9 heating cycles.
✔ The display shows the settings for the programmed heating cycles.
✔ The display shows the start time and the end time for the "Sabbath mode" function.
11. Touch the control ring.
✔ The display shows the settings for the programmed heating cycles.
12. Navigate though the list of programmed heating cycles in the menu with the control ring.

### 10.5 Changing the time period for the "Sabbath mode" function

1. Press ⏲.
✔ The display shows the settings that have been selected for the "Sabbath mode" function.
2. Press "Summary".
3. Press ←.
4. Press →.
✔ The display shows the start time and the end time.
5. Press the start time and use the control ring to change the start time.

### 10.6 Changing settings for the interior lighting

1. Press ⏲.
✔ The display shows the settings that have been selected for the "Sabbath mode" function.
2. Press "Summary".
3. Press ←.
4. To switch the interior lighting on at the lowest lighting level for the entire cooking time while the "Sabbath mode" function is active, set the switch for the interior lighting to "On".
5. To switch the interior lighting off for the entire cooking time while the "Sabbath mode" function is active, set the switch for the interior lighting to "Off".

### 10.7 Changing the heating cycle

1. Press ⏲.
✔ The display shows the settings that have been selected for the "Sabbath mode" function.
2. Press "Summary".
3. Press ←.
4. Navigate though the list of programmed heating cycles in the menu with the control ring and press the required heating cycle.
5. To change the settings for the heating cycle, press the corresponding settings.
6. To save the changed setting, press ✓.

### 10.8 Deleting a heating cycle

1. Press ⏲.
✔ The display shows the settings that have been selected for the "Sabbath mode" function.
2. Press "Summary".
3. Press ←.
4. Navigate though the list of programmed heating cycles in the menu with the control ring and select the required heating cycle.
5. Press 🗑.

### 10.9 Starting the "Sabbath mode" function

**Tip:** Install the manual door opening aid before the Sabbath.

▸ Press ▶ to start.
✔ The "Sabbath mode" function starts.
✔ At the end of the "Sabbath mode" function, the appliance switches off.

### 10.10 Switching off the "Sabbath mode" function

1. Swipe repeatedly from left to right until the display shows "Modes & Service".
2. Use the control ring to select the "Sabbath mode" function.
3. Set the switch to the right of the "Sabbath mode" list entry to "Off".

**Note:** To switch off the "Sabbath mode" function, you can also press ⏻ on the control ring.

## 11 Manual door opening aid

### 11.1 Installing the manual door opening aid

1. Position the manual door opening aid on the side of the appliance where the appliance door opens.
    ▸ Position the manual door opening aid on the top or bottom corner of the appliance door.

- Do not install the manual door opening aid on the surface intended for opening the appliance door.

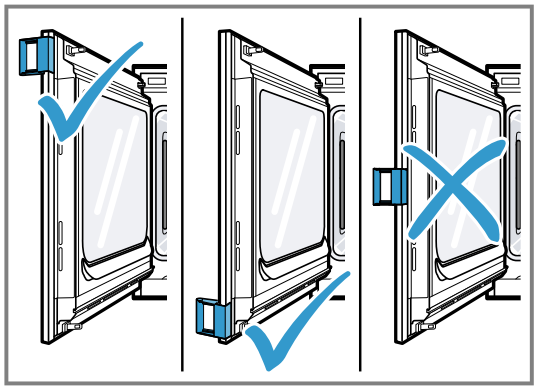

You can also install the manual door opening aid if the appliance door is open.

2. To secure the manual door opening aid to the appliance door, position the manual door opening aid at an angle between the appliance door and the appliance frame and push against the appliance door.

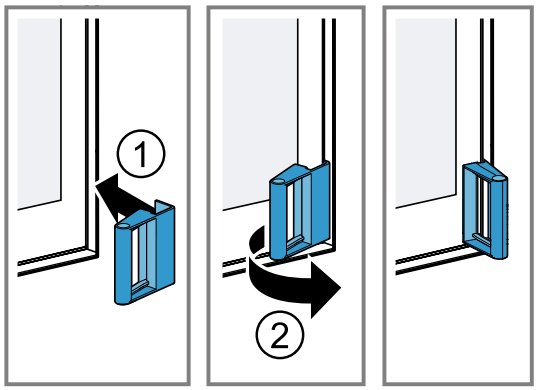


3. Make sure that the manual door opening aid lies flat against the appliance door and that there is no gap between the side edge of the appliance door and the manual door opening aid.

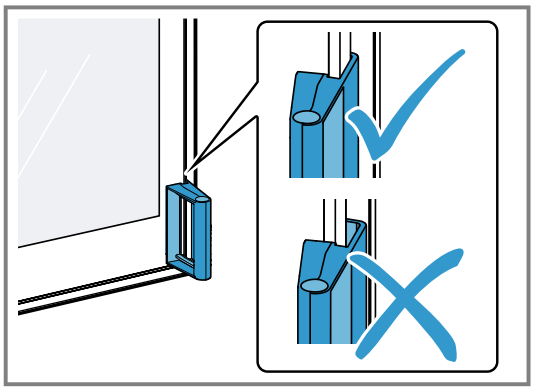

✔ You will hear a click.
✔ The manual door opening aid is installed.

### 11.2 Opening the appliance door using the manual door opening aid

- To open the appliance door using the manual door opening aid, pull the handle on the manual door opening aid.

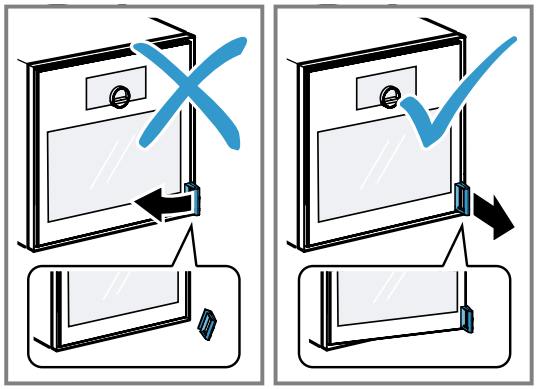

**Note:** Do not pull the handle to the side as this could cause the manual door opening aid to come loose from the appliance door. Pull the handle straight outwards.

### 11.3 Cleaning the manual door opening aid

1. Clean the manual door opening aid with hot soapy water and a soft cloth.
2. Dry the manual door opening aid with a soft cloth.

### 11.4 Removing the manual door opening aid

- Pull the handle of the manual door opening aid to the side opposite to the direction in which the appliance door opens.

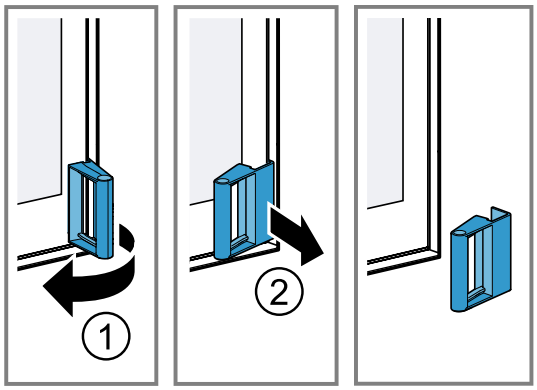


✔ The manual door opening aid is removed.

## 12 Child lock

Activate the "Child lock" function so that children cannot accidentally switch the appliance on or change the settings.
If the child lock is activated, operation via the display and the control ring is not possible.

If the child lock is activated and the power fails, the child lock can be deactivated when the power comes back on.
You can activate the child lock even during operation.

### 12.1 Activating the childproof lock

**Requirement:** In the basic settings →*Page 38*, the option "On" is set for the "Display child lock" function.

1. Press .
2. Press .

✔ The display shows .
✔ The "Child lock" function is activated.

### 12.2 Deactivating the childproof lock

1. Press and hold  for approximately 2 seconds.

✔ The "Child lock" function is deactivated.

2. Set the appliance as normal.

## 13 Rotisserie spit

The rotisserie spit is particularly good for cooking large roasts, such as rolled roasting joints or poultry. The meat becomes crispy and brown.

***NOTICE***

Temperatures above 480°F (250°C) damage the rotisserie spit.

- Only use the rotisserie spit in your appliance at a maximum temperature of 480°F (250°C).

You can use the rotisserie spit with all operating modes. For best results, use the ""Broiler"" or ""Top heat"" types of heating.

### 13.1 Preparing the rotisserie spit

1. Position the frame above the broiling tray so that the openings in the broiling tray and the curved frame elements are vertically stacked ①.
   - Push the frame at an angle from the rear onto the broiling tray ②.
   - Place the frame on the front of the broiling tray③.

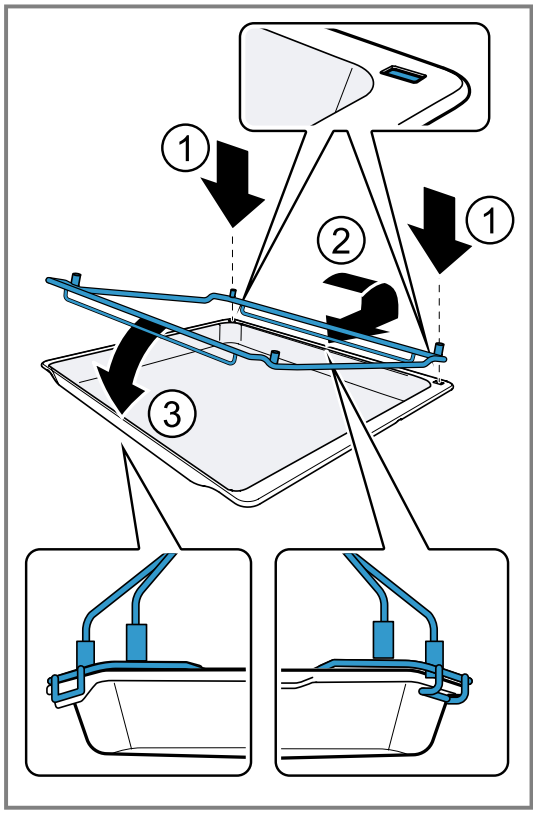


2. Push the two supporting frames into the sockets in the frame.
   - Position the supporting frames with the drive on the left-hand side.
   - To ensure that the rotisserie spit does not rest crookedly on the support brackets, make sure that the support brackets are inserted all the way into the sockets of the frame.

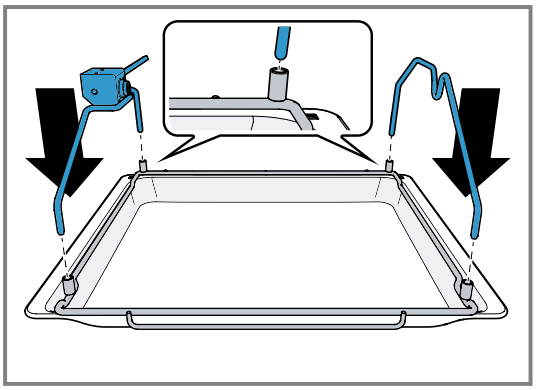

3. Press and hold the button on the handle.
   - Slide the handle onto the rotisserie spit.
   - Release the button.

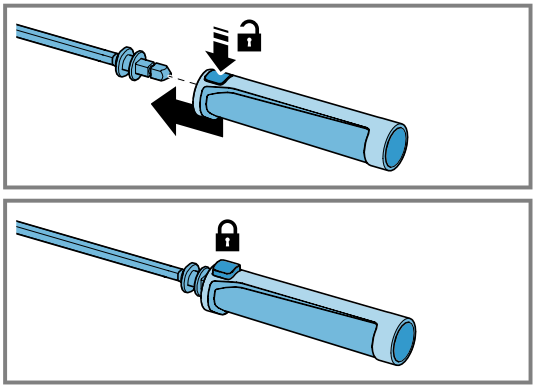

4. Fit the right-hand retaining prongs to the rotisserie spit and screw them in with a fixation screw.

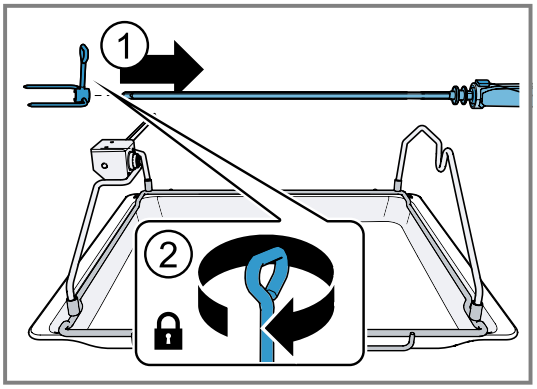

5. Do not exceed the maximum permissible weight for the rotisserie spit of 11 lbs (5 kg).

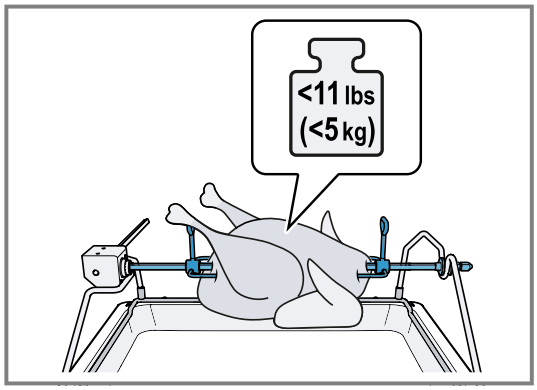


6. Skewer the food and move it to the middle of the rotisserie spit.
7. Secure two smaller chickens using two retaining prongs each.
8. Secure any protruding parts, e.g. chicken wings.

✔ Make sure that the protruding parts do not touch the broiling element.

9. Fit the left-hand retaining prongs to the rotisserie spit ① and screw them in with a fixation screw ②.

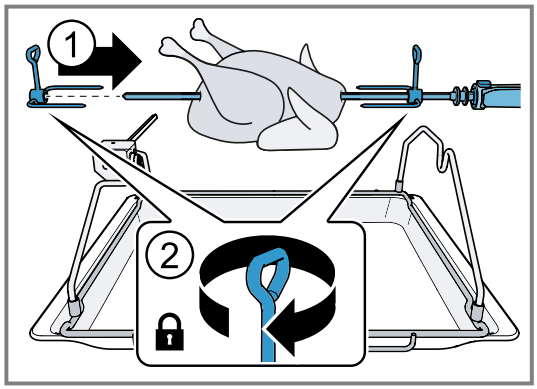


10. Set the rotisserie spit down onto the supporting frames.
    - ▸ Push the rod of the rotisserie spit into the drive so that it engages with its square profile.

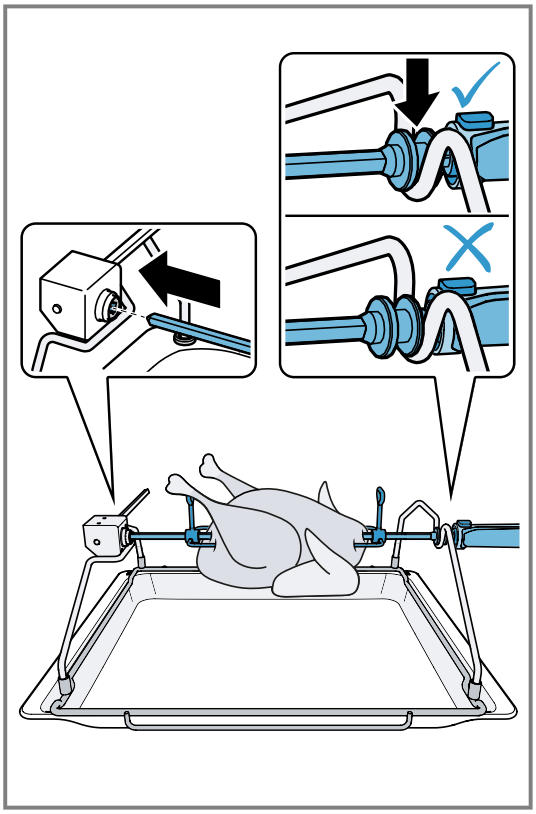

11. Press and hold the button on the handle.
    - ▸ Remove the handle.
    - ▸ Release the button.

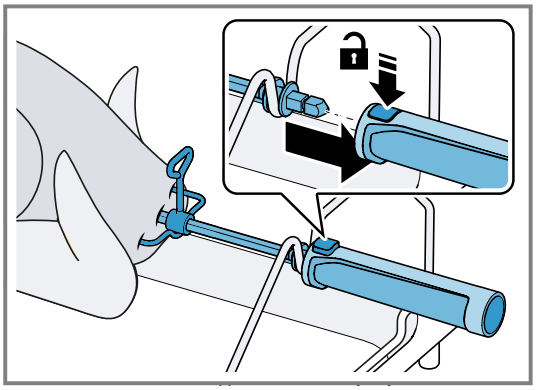

12. Insert the broiling tray along with the rotisserie spit at the bottom shelf level.
    - Do not push the broiling tray between the shelf positions.

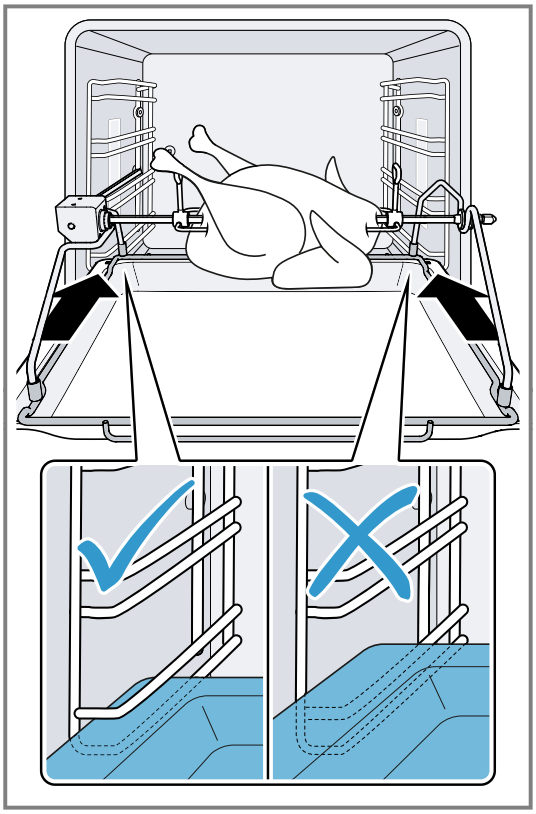

13. The drive shaft must engage in the opening in the rear panel of the appliance.
    - If necessary, turn the rotisserie spit slightly.

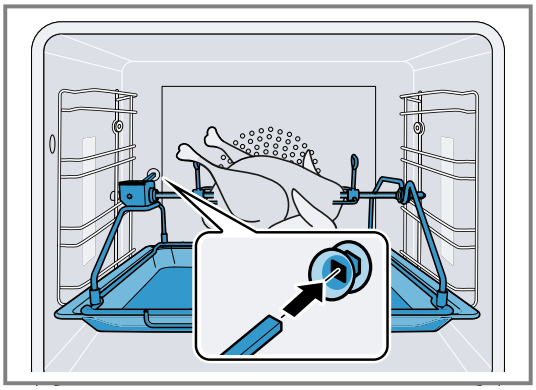

## 13.2 Switching on the rotisserie spit

1. Set the temperature and type of heating you require.
2. Press .
3. Press .
- ✔ The display shows  in the "Manual" appliance display.
4. Press .
- ✔ The appliance switches on the rotisserie spit drive.

## 13.3 Switching off and removing the rotisserie spit

**⚠ WARNING**

The rotisserie spit and associated retaining frame are hot.
- Wear gloves to take them out.
- Place the rotisserie spit and the associated retaining frame on a stable and heat-resistant surface.

Press the knob on the handle to release it from the rotisserie spit.
- When lifting the rotisserie spit, do not press the knob on the handle.

1. Press .
2. Press .
- ✔ The rotisserie spit drive stops.
3. Switch off the appliance.
4. Remove the broiling tray with the rotisserie spit and place it on a stable, heat-resistant surface.

## 13.4 Inserting the handle

1. Press and hold the button on the handle.

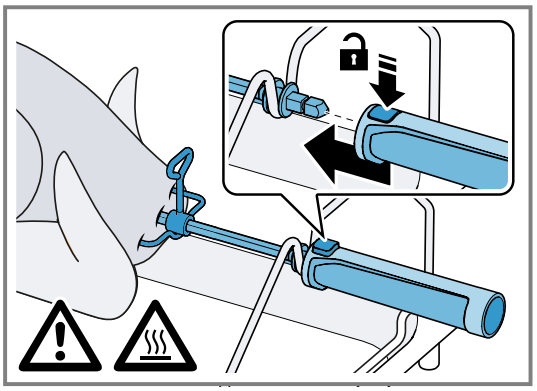

2. Slide the handle onto the rotisserie spit.
3. Release the button.

## 13.5 Removing the food from the rotisserie spit

**⚠ WARNING**

The support brackets are hot.
- Allow the support brackets to cool before removing them.

- Pull the rotisserie spit out of the drive ①, loosen the fixation screws on the retaining prongs ②, loosen the left-hand retaining prong ③ and remove the food from the rotisserie spit.

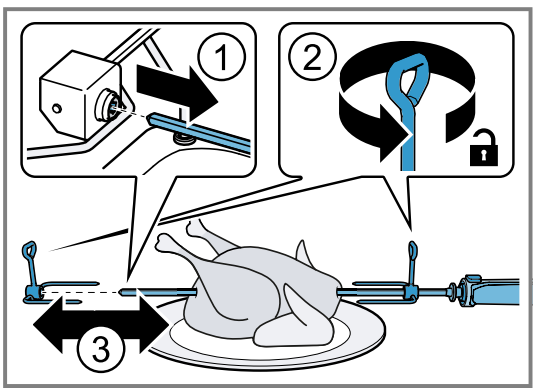

### 13.6 Removing the handle

1. Press and hold the button on the handle.

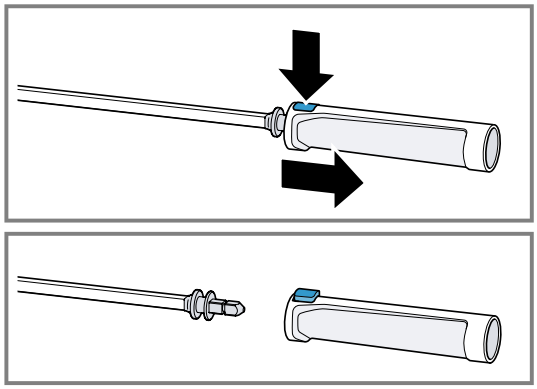

2. Pull the handle off the rotisserie spit.
3. Release the button.
4. Only press down on the button on the handle of the rotisserie spit if there is no food on the spit.

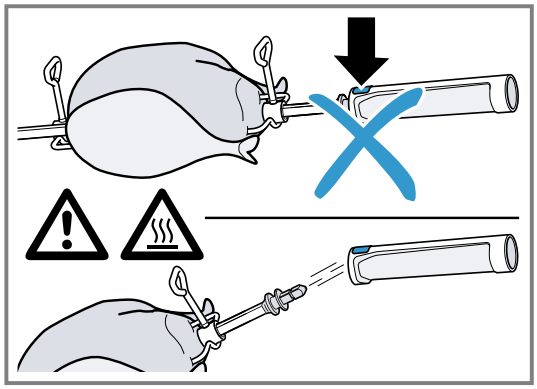

The food may fall down.

### 13.7 Storing the rotisserie spit

***NOTICE***

The heat in the oven causes damage to the handle of the rotisserie spit.

- Do not place the handle of the rotisserie spit in the oven.
- After cleaning, store the rotisserie spit handle with the rotisserie spit.

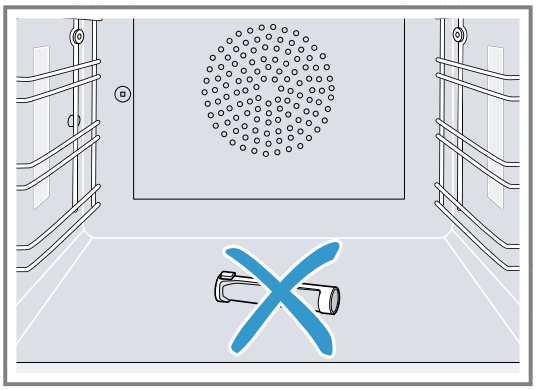

## 14 Searing function

With the searing function, the appliance heats up at full capacity for approximately 3 minutes. You can use this to sear steaks, for example.
To use the searing function, you need a cast iron roaster and pull-out system [1] – these are special accessories.

### 14.1 Starting the searing function

**Requirement:** The "Roaster operation" type of heating is set.

1. Press ▶.
✔ ▶ lights up orange.
2. Press .
✔ The searing function starts.

**Tip:** You can also set the searing function to start several times consecutively.

**Note:** When the searing function has ended, ▶ lights up white.

### 14.2 Ending the searing function early

- Press ■.

## 15 Favorites

In the "Favorites" appliance display, you can save preferred automatic programs, recommended settings or combinations of type of heating, temperature, core temperature or cooking time. The appliance adopts the selected settings, such as temperature, cooking time, weight or level of browning for the favorites.

You can individually select the names for the favorites. You can use the Home Connect® app to change the saved settings for the favorite or the order of the favorites.
After starting the favorite, you can change the settings.
→ *"Changing a favorite", Page 31*

[1] This function is currently unavailable.

## 15.1 Creating the first favorites

**Notes**
- You can save a food as a favorite at the beginning or end of an automatic program or a setting recommendation.
- You can save a favorite in the "Manual operation" appliance display. As soon as you have selected the settings for the temperature, the type of heating and the cooking time, the display shows ☐.

**Requirement:** The settings for the favorites are selected or a heating process ends.
1. Press ☐.
✔ The display shows the "Favorites" appliance display.
2. Press ✎.
3. Use the keyboard to enter a name.
4. Press ✓.

## 15.2 Selecting a favorite

1. Swipe repeatedly from right to left until the display shows "Favorites".
→ *"Appliance displays", Page 12*
2. Use the control ring to select the desired favorite.
3. Press the favorite.

## 15.3 Renaming a favorite

**Requirement:** The favorite has been selected.
→ *"Selecting a favorite", Page 31*
1. Press ✎.
2. Enter the name for the favorite.
3. Press ✓ to confirm.

## 15.4 Starting a favorite

**Requirement:** The favorite has been selected.
→ *"Selecting a favorite", Page 31*
▸ Press ▶ to start.

## 15.5 Changing a favorite

The availability of settings depends on the favorite selected.

**Requirements**
- The favorite has been selected.
→ *"Selecting a favorite", Page 31*
- The favorite is stopped.

1. Change the selected settings, e.g. the temperature, the type of heating, or the cooking time.
The "Add broiler" function is unavailable.
The "Automatic door opening at end of process" function and the rotisserie spit are available.
If you have saved an automatic program as a favorite, you can only change certain settings, e.g. the weight, the required degree of browning, the thickness of the food or the cooking level of the food.
If you have saved a recommended setting as a favorite, you can change the settings on the appliance as soon as the favorite is started. You can only save the changed settings via the Home Connect® app.
As soon as the favorite is stopped or has finished, the Home Connect® app asks if you would like to save the settings in the favorite.
2. Press ✓.
3. Press ▶ to start.

✔ The operation starts with the changed settings.

**Note:** The appliance does not save the changed settings in the selected favorite. If you select the favorite again, the settings match the settings when the favorite was created.
You can use the Home Connect® app to change the settings for the favorites.

## 15.6 Deleting a favorite

**Requirement:** The favorite has been selected.
→ *"Selecting a favorite", Page 31*
1. Press 🗑.
2. Press ✓ to confirm.

# 16 Programs

The "Programs" appliance display includes the automatic programs and recommended settings.

## 16.1 Automatic programs

You can use the "Automatic programs" function to cook a wide variety of food. The appliance will choose the optimal setting for you.
In automatic programs, the appliance defines the optimal settings after you enter the weight and required cooking result, for example. The automatic programs are labeled with a checkmark in the overview list.
The cooking time only begins once the appliance has preheated. You can find information about the accessories or shelf levels in the tip for the respective program.

**Note:** In the basic settings →*Page 38*, you can filter automatic programs, e.g. with the following filters "Vegetarian" or "No meat & poultry".

### Information about the settings for the automatic programs

Observe the instructions for the settings of the automatic programs.
- The cooking result depends on the quality of the food and the size and type of cookware. For an optimal cooking result, only use food that is in good condition and meat that is chilled to refrigerator temperature. For frozen food, use food straight out of the freezer only.
- The food is divided into categories. One or more dishes are listed for each category. The display shows the last selected meal.
- For some dishes, the appliance asks you to enter, for example, the weight, the desired level of browning, the thickness of the food or the cooking level of the food.
- For some food, preheat the empty cooking compartment for an optimal cooking result. Place the food in

the cooking compartment once the preheating is complete and a message appears in the display.
- The appliance displays the selected settings next time as a suggestion.
- For some programs, you need the core temperature probe. Use the core temperature probe →*Page 33* for these programs.
- To achieve good results, the cooking compartment must not be too hot for the type of food you have selected. If the cooking compartment is too hot, the display shows a corresponding notification. Allow the appliance to cool and then try again.

### Selecting an automatic program

1. Swipe repeatedly from right to left until the display shows "Programs".
✔ The display shows the first program in the "Vegetables" category or the last set automatic program.
✔ The display shows the preselected values for the program or the last set values.
✔ The display shows a tip and symbols for the Favorites →*Page 30* category and for the program start.
2. Use the control ring to select the required meal, and press on the required meal.
✔ The display shows the name of the selected dish and the corresponding values.

### Changing category

1. Press the symbol for the category.
✔ The display shows the available categories in the ring menu.
2. Select the required category with the control ring.
3. Press < or press the category in order to confirm the selection.
✔ The display shows the first dish in the selected category and the corresponding values.

### Changing the program

1. Press on the name of a dish or navigate through the list of dishes in the menu with the control ring.
2. Press the required dish.
✔ The display shows the name of the selected dish and the corresponding settings.
3. Press the setting.
4. Use the control ring to change the setting and press on the required setting.
Not all settings can be changed.
You cannot change the type of heating.
5. Press <.
✔ The display shows the name of the selected dish and the corresponding settings.
6. Press ▭.
✔ The display shows information about the accessories and preparation.
7. Follow the information on the display.

### Starting the automatic program

▸ Press ▶.
✔ Once the cooking time has elapsed, a signal tone sounds.
✔ The appliance stops heating.

**Note:** If you open the appliance door during an automatic program, this affects the cooking result. Do not open the appliance door, or only open it briefly. The appliance interrupts the automatic program and continues to run when you close the appliance door.

### Extending the cooking time

If you are still not satisfied with the cooking result, you can increase the cooking time again.

1. Press 00.00.
2. Select the required cooking time.
3. Press ✓ to confirm.

### Canceling the automatic program

**Note:** Once you have started the automatic program, you can no longer change the settings.

▸ Press ■.
✔ The appliance ends the automatic program.

### Saving a program as a favorite

You can save a program as a favorite at the start or end of an automatic program.

1. Press ☆.
✔ The display shows the "Favorites" appliance display.
2. Press ✎.
3. Use the keyboard to enter a name.
4. Press ✓.
You can only change the settings for a saved favorite via the Home Connect® app.

## 16.2 Recommended settings

With recommended settings, the appliance specifies the optimal type of heating.
The recommended settings are not labeled with a checkmark in the overview list.
If a weight is specified in the tip, the recommended temperature and the cooking time relate to this weight specification. You can adapt the temperature and cooking time within the available ranges.
The cooking time only begins once the appliance has preheated. You can find information about the accessories or shelf levels in the tip for the respective program.

### Information on the recommended settings

Observe the information on the recommended settings.

- The cooking result depends on the quality of the food and the size and type of cookware. For an optimal cooking result, only use food that is in good condition and meat that is chilled to refrigerator temperature. For frozen food, use food straight out of the freezer only.
- The food is divided into categories. One or more dishes are listed for each category. The display shows the last selected meal.
- With the recommended settings, the appliance specifies the type of heating.
- You can change the temperature and the cooking time in the specified areas.
- For some food, preheat the empty cooking compartment for an optimal cooking result. Place the food in the cooking compartment once the preheating is complete and a message appears in the display.
- The appliance displays the selected settings next time as a suggestion.

- To achieve good results, the cooking compartment must not be too hot for the type of food you have selected. If the cooking compartment is too hot, the display shows a corresponding notification. Allow the appliance to cool and then try again.

### Selecting a recommended setting

1. Swipe repeatedly from right to left until the display shows "Programs".
✔ The display shows the first program in the "Vegetables" category or the last set automatic program.
✔ The display shows the preselected values for the program or the last set values.
✔ The display shows a tip and symbols for the Favorites category and for the program start.
2. Use the control ring to select the required meal, and press on the required meal.
✔ The display shows the name of the selected dish and the corresponding values.

### Changing category

1. Press the symbol for the category.
✔ The display shows the available categories in the ring menu.
2. Select the required category with the control ring.
3. Press < or press the category in order to confirm the selection.
✔ The display shows the first dish in the selected category and the corresponding values.

### Changing the program

1. Press on the name of a dish or navigate through the list of dishes in the menu with the control ring.
2. Press the required dish.
✔ The display shows the name of the selected dish and the corresponding settings.
3. Press the setting.
4. Use the control ring to change the setting and press on the required setting.
Not all settings can be changed.
You cannot change the type of heating.
5. Press <.
✔ The display shows the name of the selected dish and the corresponding settings.
6. Press .
✔ The display shows information about the accessories and preparation.
7. Follow the information on the display.

### Starting a recommended setting

▸ Press ▶.
✔ Once the cooking time has elapsed, a signal tone sounds.
✔ The appliance stops heating.

**Note:** If you open the appliance door when a recommended setting is running, this affects the cooking result. Do not open the appliance door, or only open it briefly. The appliance interrupts the recommended setting and continues to run when you close the appliance door.

### Extending the cooking time

If you are still not satisfied with the cooking result, you can increase the cooking time again.

1. Press 00.00.
2. Select the required cooking time.
3. Press ✓ to confirm.

### Changing a recommended setting

**Note:** Once you have started the recommended setting, you can change the settings.

1. Press on the recommended setting.
2. Change the desired settings.

### Saving a program as a favorite

You can save a program as a favorite at the start or end of a recommended setting.

**Requirements**

- The temperature and type of heating are set.
- The cooking time or core temperature is set.

1. Press .
✔ The display shows the "Favorites" appliance display.
2. Press .
3. Use the keyboard to enter a name.
4. Press ✓.
You can only change the settings for a saved "Favorites" via the Home Connect® app.

# 17 Core temperature sensor

The core temperature probe makes it possible to cook with exact precision. The core temperature probe measures the temperature at 3 measuring points inside the food. When the required core temperature is reached, the appliance automatically switches off, ensuring that all food is cooked perfectly.

**⚠ WARNING**
The oven cavity and the core temperature probe become very hot.
▸ Use oven gloves when inserting and removing the core temperature probe.

***NOTICE***
Temperatures above 480°F (250°C) damage the core temperature probe.
▸ Only use the core temperature probe in your appliance at a maximum temperature of 480°F (250°C).
▸ Do not use the core temperature probe with the "Broil" type of heating.
▸ Before using the "Broil" type of heating, remove the core temperature probe from the cooking compartment.
▸ When using the core temperature probe with the"Broil + circulated air" type of heating, set the temperature to a maximum of 480°F (250°C).

**⚠ WARNING**
An incorrect core temperature probe may damage the insulation.
- Only use the core temperature probe that is suitable for this appliance.

***NOTICE***
Aggressive cleaning agents may damage the core temperature probe.
- Do not clean the core temperature probe in the dishwasher.

**⚠ WARNING**
The core temperature probe is sharp.
- Handle the core temperature probe with care.

Only use the core temperature probe supplied. The core temperature probe →*Page 18* is available as a spare part from customer service or the online shop.
If you use the core temperature probe, never place the food on the top shelf level.
After use, always remove the core temperature probe from the cooking compartment. Never store the core temperature probe in the cooking compartment.
After each use, clean the core temperature probe with a damp cloth.
The measurable range is 60-212 °F (15 °C to 100 °C). Outside of the measurable range, the display shows "<60 F (15 °C)" or ">212 F (100 °C)" for the current core temperature.
If you leave food in the cooking compartment for some time after cooking, the core temperature will continue to rise somewhat due to the residual heat in the cooking compartment.

## 17.1 Inserting the core temperature probe into the food

1. Insert the core temperature probe fully into the food.
2. Do not insert the core temperature probe into the fat.
3. Ensure that the core temperature probe is not touching any cookware or any bones.
4. Place the food in the oven cavity.

### Inserting the core temperature probe into meat

1. Insert the core temperature probe at the thickest point on the side as far as it will go into the meat.

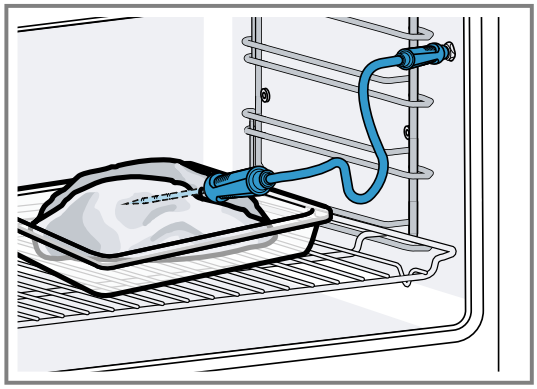

2. If there is more than one piece of meat, insert the core temperature probe into the middle of the thickest piece.

### Inserting the core temperature probe into poultry

1. Insert the core temperature probe as far as it will go into the thickest point in the breast.

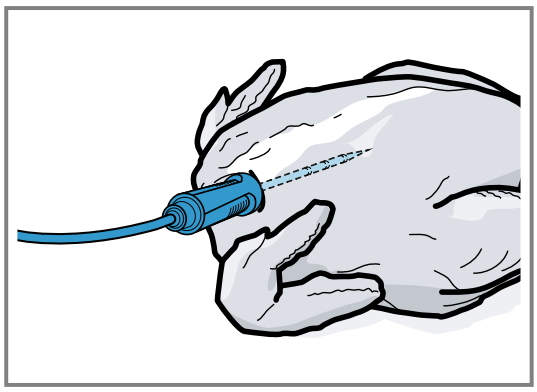

2. Depending on its composition, insert the core temperature probe into the poultry crossways or lengthways.

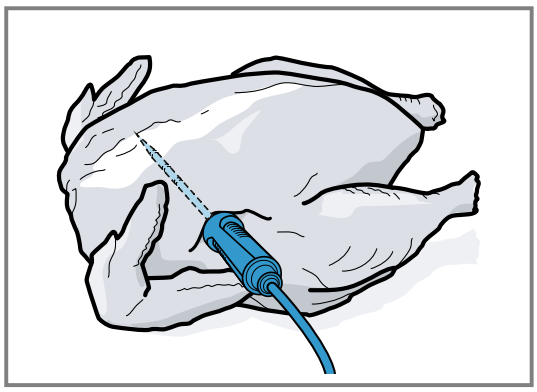

3. With poultry, ensure that the tip of the core temperature probe does not protrude into the cavity in the middle of the bird.

### Inserting the core temperature probe into fish

1. Insert the core temperature probe behind the head as far as it will go towards the spine.

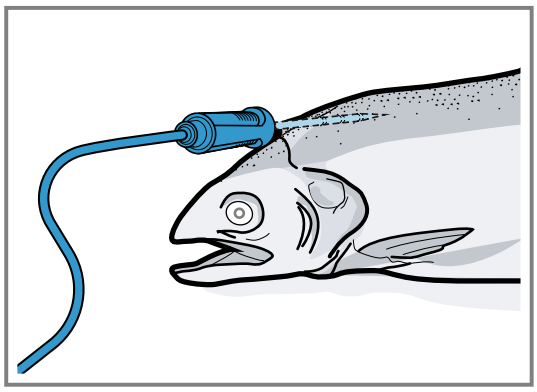

2. Place the whole fish onto the wire rack and prop it up in the swimming position using half a potato.

## 17.2 Turning the food

1. Do not pull out the core temperature probe when turning the food.
   If you pull out the core temperature probe during operation, the appliance resets all settings. You must then reset the settings.

2. Turn the food.
3. Once you have turned the food, check that the core temperature probe is correctly positioned in the food.

## 17.3 Setting the core temperature probe

***NOTICE***

The heat of the grilling surface may damage the core temperature probe.

- Ensure that the distance between the glass grilling surface and the core temperature probe and the cable of the core temperature probe is a few centimeters. In doing so, ensure that the meat can expand during the cooking process.

You may damage the cable of the core temperature probe with the appliance door.

- Do not trap the cable of the core temperature probe in the appliance door.

**Requirement:** A cooking time end is not set. The cooking time end and core temperature probe functions are not available at the same time.

1. Slide the food into the oven cavity with the core temperature probe inserted.
2. Insert the core temperature probe into the socket in the oven cavity.
3. Close the appliance door.

✔ The display shows the current interior oven temperature and the symbol for the core temperature probe .

4. Select the required type of heating and interior oven temperature using the control ring.
5. Press .
6. Use the control ring to select the required core temperature →*Page 35*.
   - Ensure that the set core temperature is higher than the current core temperature.

   You can change the set core temperature at any time.
7. The set core temperature can be cleared and reset as needed using C or the control ring.
8. Press < or press the set core temperature.
9. Press ▶.

✔ The appliance heats up using the set type of heating.
✔ Once you have set the core temperature, the display shows the type of heating and the current core temperature.
✔ Once you have set the core temperature, the display shows the type of heating and switches between displaying the estimated time →*Page 36* until the core temperature is reached and the current and set core temperature.
✔ If the current core temperature is 9°F (5°C) below the set core temperature, the display shows the current and set core temperature as enlarged.
✔ Once the core temperature for the food has been reached, the display shows the required core temperature alongside the set core temperature and a signal sounds.
✔ The appliance ends the cooking process automatically.

**Note:** If you do not continue to operate the appliance after the signal tone, the display shows how much time has elapsed since the food reached the core temperature.

Once you start operating the appliance again, the appliance clears the time display. After around 20 minutes without any further operation, the appliance switches to low power mode.

## 17.4 Deleting the set core temperature

- In the "Manual" appliance display, double-click on the temperature.
  → *"Appliance displays", Page 12*

✔ The display shows the current core temperature.

## 17.5 Changing the set core temperature

1. Press .
2. Change the set core temperature using the control ring.
   Once the display shows the set core temperature enlarged in the 12 o'clock position, you can change the set core temperature directly using the control ring.

## 17.6 Core temperature guideline values

The following overview provides you with guideline values for the core temperature. The guideline values depend on the quality and composition of the food.
Only use fresh food that has not been frozen. For hygiene reasons, ensure that critical foods such as fish and game reach a core temperature of at least 140-160 °F (62-70 °C) and poultry and minced meat 180-195 °F (80-90 °C).

| Food | Core temperature guideline value in °F (°C) |
|---|---|
| **Beef** | |
| Sirloin, fillet of beef, entrecôte, roast beef, rare | 116-131 (47-55) |
| Sirloin, fillet of beef, entrecôte, roast beef, medium rare | 133-145 (56-63) |
| Sirloin, fillet of beef, entrecôte, roast beef, medium | 147-158 (64-70) |
| Sirloin, fillet of beef, entrecôte, roast beef, well done | 160-167 (71-75) |
| **Pork** | |
| Joint of pork | 167-176 (75-80) |
| Loin of pork, medium rare | 149-158 (65-70) |
| Loin of pork, medium | 160-167 (71-75) |
| Pork loin, well done | 169-176 (76-80) |
| Meatloaf | 185 (85) |
| Fillet of pork, medium rare | 149-158 (65-70) |
| Fillet of pork, medium | 160-167 (71-75) |
| **Veal** | |
| Joint of veal, well done | 167-176 (75-80) |
| Breast of veal, stuffed, well done | 167-176 (75-80) |
| Saddle of veal, medium | 147-158 (64-70) |
| Saddle of veal, well done | 160-167 (71-75) |
| Fillet of veal, rare | 120-131 (50-55) |
| Fillet of veal, medium rare | 133-145 (56-63) |

| Food | Core temperature guide-line value in °F (°C) |
|---|---|
| Fillet of veal, medium | 147-158 (64-70) |
| Fillet of veal, well done | 160-167 (71-75) |
| **Game** | |
| Saddle of venison | 140-158 (60-70) |
| Leg of venison | 158-167 (70-75) |
| Venison loin steaks | 149-158 (65-70) |
| Saddle of hare, saddle of rabbit | 149-158 (65-70) |
| **Poultry** | |
| Chicken | 194 (90) |
| Guinea fowl | 176-185 (80-85) |
| Goose, turkey, duck | 185-194 (85-90) |
| Duck breast, medium rare | 131-140 (55-60) |
| Duck breast, medium | 141-158 (61-70) |
| Duck breast, well done | 160-176 (71-80) |
| Ostrich steak | 140-149 (60-65) |
| **Lamb** | |
| Leg of lamb, medium | 149-156 (65-69) |
| Leg of lamb, well done | 158-176 (70-80) |
| Saddle of lamb, medium rare | 131-140 (55-60) |
| Saddle of lamb, medium | 141-147 (61-64) |
| Saddle of lamb, well done | 149-167 (65-75) |
| **Mutton** | |
| Leg of mutton, medium rare | 158-176 (70-75) |
| Leg of mutton, medium | 169-176 (76-80) |
| Leg of mutton, well done | 178-185 (81-85) |
| Saddle of mutton, medium | 158-176 (70-75) |
| Saddle of mutton, well done | 169-176 (76-80) |
| **Fish** | |
| Fillet, whole, medium | 136-147 (58-64) |
| Fillet, whole, well done | 149-154 (65-68) |
| Terrine | 144-149 (62-65) |
| **Other** | |
| Bread | 205 (96) |
| Pâté | 162-167 (72-75) |
| Terrine | 158-176 (70-75) |
| Foie gras | 113-140 (45-60) |
| Reheating food | 167 (75) |

### 17.7 Estimated cooking time

After preheating, if the appliance has a temperature setting above 250 °F (120 °C) and the core temperature probe is inserted, the display shows an estimated cooking time a few minutes into the cooking time. The appliance continuously updates the estimated cooking time. The estimated cooking time is only available if you connect your appliance to the Home Connect® app.
The longer the cooking process lasts, the more precise the estimated cooking time becomes. Do not open the appliance door; this distorts the estimated cooking time.
The display shows the estimated cooking time in manual operation and in the automatic program.
To display the current core temperature, press on the set core temperature.

## 18 Home Connect®

This appliance is network-capable. Connecting your appliance to a mobile device lets you control its functions via the Home Connect® app, adjust its basic settings and monitor its operating status.
The Home Connect® services are not available in every country. The availability of the Home Connect® function depends on the availability of the Home Connect® services in your country. You can find information on this at: *www.home-connect.com*.
The Home Connect® app guides you through the entire registration process. Follow the instructions, noting the information in the Home Connect® app.

**Notes**

- Note the safety information in this instruction manual and ensure that it is also observed when operating the appliance using the Home Connect® app.
- Operating the appliance on the appliance itself always takes priority. It is not possible to operate the appliance using the Home Connect® app during this time.
- In networked standby mode, the appliance requires a maximum of 2 watts.

### 18.1 Setting up Home Connect®

**Requirements**

- The appliance is connected to the power supply and is switched on.
- You have a mobile device with a current version of the iOS or Android operating system, e.g. a smartphone.
- The appliance receives signals from the WLAN home network (Wi-Fi) at its installation location.
- The mobile device and the appliance are within range of your home network's Wi-Fi signal.

1. Scan the following QR code.

You can install the Home Connect® app and connect your appliance via the QR code.

2. Follow the instructions in the Home Connect® app.

## 18.2 Home Connect® settings

You can adjust the home network settings in your appliance's basic settings.
Which settings the display shows will depend on whether Home Connect® has been set up and whether the appliance is connected to your home network.
You can switch the network connection on or off as required. The network information is retained after the appliance is switched off. After switching on the appliance, wait for a few seconds until it reconnects to the home network.
The display uses different symbols to show the connection strength to the router.

**Note:** In networked standby mode, the appliance requires a maximum of 2 W.

You can use the Home Connect® app to access the appliance's functions. If you select the "Off (monitoring only)" setting in the basic settings →*Page 38* for "Remote start", the Home Connect® app only shows the appliance's operating status and you can configure the settings.
If you select the "Permanent" setting in the basic settings →*Page 38* for "Remote start", you can start and operate your appliance at any time without any prior approval on the appliance.
If you select the "Manual" setting in the basic settings →*Page 38* for "Remote start", the appliance requires approval in the control center in order to start a function.
In the basic settings →*Page 38*, you can use "Network information" to display the network information.
In the basic settings →*Page 38*, you can use "Network credentials reset" to delete all network access data from the appliance at any time.

## 18.3 Starting functions with the Home Connect® app via manual "Remote start"

You can use the Home Connect® app to set the appliance remotely via the "Remote start" function. If you select the "Manual" setting in the basic settings for "Remote start", the appliance requires approval in the control center in order to start a function.

**⚠ WARNING**
Combustible objects that are left in the cooking compartment may catch fire.
- ▸ Never store combustible objects in the cooking compartment.
- ▸ If smoke is emitted, the appliance must be switched off or the fuse must be switched off and the door must be held closed in order to stifle any flames.

**Requirements**
- The appliance is connected to the home network and to the Home Connect® app.
- To start a function, the "Manual" setting is selected in the basic settings for "Remote start".

1. To activate manual remote start, press ⊜ and then ☝.
2. Configure a setting in the Home Connect® app and send it to the appliance.
3. Start a function.

**Note:** If you open the appliance door more than 15 minutes after activating remote start or after the operation ends, the appliance deactivates the manual remote start.
24 hours after activating remote start, the appliance deactivates the manual remote start.

## 18.4 Starting functions with the Home Connect® app via permanently activated "Remote start"

You can use the Home Connect® app to set and start the appliance remotely via the "Remote start" function. If you select the "Permanent" setting in the basic settings for "Remote start", the appliance does not require approval in the control center in order to start a function.

**⚠ WARNING**
Combustible objects that are left in the cooking compartment may catch fire.
- ▸ Never store combustible objects in the cooking compartment.
- ▸ If smoke is emitted, the appliance must be switched off or the fuse must be switched off and the door must be held closed in order to stifle any flames.

**Requirements**
- The appliance is connected to the home network and to the Home Connect® app.
- To start a function, the "Permanent" setting is selected in the basic settings for "Remote start".

1. Configure a setting in the Home Connect® app and send it to the appliance.
2. Start a function.

## 18.5 Using the Home Connect® app to change settings

You can use the Home Connect® app to set the appliance remotely.

**⚠ WARNING**
Combustible objects that are left in the cooking compartment may catch fire.
- ▸ Never store combustible objects in the cooking compartment.
- ▸ If smoke is emitted, the appliance must be switched off or the fuse must be switched off and the door must be held closed in order to stifle any flames.

**Requirement:** The appliance is connected to the home network and to the Home Connect® app.
- ▸ Configure a setting in the Home Connect® app and send it to the appliance.

## 18.6 Switching the Wi-Fi on or off

**Requirement:** The "On" and "Off" settings are only available if a connection to the Home Connect® server has been established.

1. Press ⊜ in the status line.
2. Press ᯤ in the control center.
3. Press the desired setting.
4. If required, use < to switch to "Settings".

### 18.7 Displaying the "Sabbath mode" function with the Home Connect® app

**Requirement:** The appliance is connected to Home Connect®.

- ▸ Display or hide the "Sabbath mode" function under "Settings" in the Home Connect® app under "Additional settings".
- ✔ Under "Type of heating", the Home Connect® app shows three options for the "Sabbath mode" function.

**Note:** The appliance display shows the "Sabbath mode" function under "Modes & Service".

### 18.8 Deactivating the "Sabbath mode" function with programmed start time using the Home Connect® app

**Requirements**

- The appliance is connected to Home Connect®.
- A start time in the future is programmed on the appliance for the "Sabbath mode" function.
- The programmed start time for the "Sabbath mode" function has not yet been reached.
- ▸ Deactivate the "Sabbath mode" function under "Settings" in the Home Connect® app under "Additional settings".
- ✔ The "Sabbath mode" function does not start.

### 18.9 Starting the "Sabbath mode" function using the Home Connect® app

The "Sabbath mode" function is available in the Home Connect® app. In the Home Connect® app, you can start the "Sabbath mode" function with "Convection", with "Top + bottom heat" or without a heating cycle. A time-delayed start and the configuration of multiple heating cycles is not possible via the Home Connect® app.

**Requirement:** In the Home Connect® app, the "Sabbath mode" function is activated under "Additional settings".

→ *"Displaying the 'Sabbath mode' function with the Home Connect® app", Page 38*

1. Under "Type of heating", select the "Sabbath mode" function with "Convection", with "Top + bottom heat" or without a heating cycle.
2. Press "Next".
3. For a heating cycle with "Convection" or with "Top + bottom heat", select the temperature and press "Next".
4. Select the time period.
5. Press "Done".
6. Press "Start".

### 18.10 Software update

Your appliance's software can be updated using the software update function, e.g. for the purposes of optimization, troubleshooting or security updates.
To do this, you must be a registered Home Connect® user, have installed the app on your mobile device and be connected to the Home Connect® server. As soon as a software update is available, you will be informed via the Home Connect® app and will be able to start the software update via the app. Once the update has been successfully downloaded, you can start installing it via the Home Connect® app if you are in your home network (Wi-Fi). The Home Connect® app informs you once the installation is successful.
You can find the current software version in the Home Connect® app under the appliance information for the appliance.

**Notes**

- The software update consists of two steps.
  - The first step is download.
  - The second step is installation on your appliance.
- You can continue to use your appliance while updates are downloading. Depending on your personal settings in the app, software updates can also be set to download automatically.
- Installation takes a few minutes. You cannot use your appliance during installation.
- We recommend that you install security updates as soon as possible.

### 18.11 Data Protection

Please read this information on data protection.

The first time your appliance is registered on a home network connected to the Internet, your appliance transmits the following types of data to the Home Connect® server (initial registration):

- Unique appliance identification (consisting of appliance codes as well as the MAC address of the installed Wi-Fi communication module).
- Security certificate of the Wi-Fi communication module (to ensure a secure data connection).
- The current software and hardware version of your home appliance.
- Status of any previous reset to factory settings.

This initial registration prepares the Home Connect® functions for use and is only required when you want to use the Home Connect® functions for the first time.

**Note:** Please note that the Home Connect® functions can only be used in conjunction with the Home Connect® app. Information on data protection can be retrieved in the Home Connect® app.

## 19 Basic settings

You can configure the basic settings for your appliance to meet your needs.

### 19.1 Overview of the basic settings

Here you can find an overview of the basic settings and factory settings. The basic settings depend on the features of your appliance.

| Symbol | Basic setting | Setting | Selection | Use |
|---|---|---|---|---|
| | Wi-Fi | Wi-Fi | ▪ On<br>▪ Off [1] | Switching the Wi-Fi on or off<br>**Note:** The On and Off settings are only available if a connection to the Home Connect® server has been established.<br>All settings are retained after the appliance is switched off. Switch on the Wi-Fi in order to allow the appliance to be controlled via the app and to use additional appliance functions. |
| | | Home Connect® assistant | ▪ During the initial connection to the Home Connect® app: "Start"<br>▪ If you have already connected successfully to the Home Connect® app: "Connect now" | Setting up Home Connect® →*Page 36* |
| | | Remote start | ▪ Off (monitoring only)<br>▪ Manual [1]<br>▪ Permanent<br>**Note:** The settings are only available if you have selected the "On" setting for Wi-Fi. | Setting "Remote start" → *"Starting functions with the Home Connect® app via manual 'Remote start'", Page 37* |
| | | Network information | ▪ MAC address<br>▪ Wi-Fi SSID<br>▪ IPv4 address<br>▪ IPv6 address<br>**Note:** The settings are only available if you have selected the "On" setting for Wi-Fi. | Displaying "Network information" |
| | | Network credentials reset | ▪ Confirm<br>The connections are reset. The appliance deletes saved network access data.<br>**Note:** The settings are only available if you have selected the "On" setting for Wi-Fi. | Reset the network access data |
| | Display | Brightness | ▪ 1<br>▪ 2<br>▪ 3<br>▪ 4 [1]<br>▪ 5<br>▪ 6 | Sets the brightness in increments |

[1] Factory setting (may vary according to model)

| Symbol | Basic setting | Setting | Selection | Use |
|---|---|---|---|---|
| | | Distant view | ▪ "On" [1]: The display shows less content if you are at a greater distance.<br>▪ "Off": The display always shows the same content. | Switch the remote view on or off |
| | | Screen in off-mode | ▪ GAGGENAU logo"displayed on approach" [1]<br>▪ None | Sets the low power mode display →*Page 15* |
| | | Ring behavior | ▪ "Standard": Press the required function and use the control ring to change the function<br>▪ "Quick selection" [1]: Use the control ring to change the function located above the control ring | Set the control ring behavior |
| | | Display child lock | ▪ "On" [1]: The symbol for the "Display child lock" function is only visible in the status line if the "Display child lock" function is active. Control ring and touch fields are locked.<br>▪ "Off": The "Display child lock" function cannot be activated. | Displays or hides the symbol for the child lock →*Page 26* in the control center |
| | | Door lock | ▪ Activated<br>▪ Off [1] | Activates or deactivates the door lock<br>**Note:** The door lock →*Page 16* prevents the appliance door from being opened accidentally. This is particularly useful when installing the appliance under the countertop. |
| | | Display alignment | ▪ Vertical [1]<br>▪ Horizontal | Aligns the display horizontally or vertically depending on the appliance's installation position or the user's body size |
| ♫ | Sounds | Switch-on/switch-off sounds | ▪ Quiet<br>▪ Standard [1]<br>▪ Loud | Set the volume of the on/off tones |
| | | Notification sounds | ▪ Off<br>▪ Quiet<br>▪ Standard [1]<br>▪ Loud | Set the volume of the notification tones |

[1] Factory setting (may vary according to model)

| Symbol | Basic setting | Setting | Selection | Use |
|---|---|---|---|---|
| | | | | **Note:** The notification tones for the warnings and error messages always remain switched on. |
| | | Process sounds | Volume<br>▪ Off<br>▪ Quiet<br>▪ Standard [1]<br>▪ Loud<br>"Repetitions":<br>▪ 1x<br>▪ "10 s": The appliance emits the signal tone repeatedly for 10 seconds.<br>▪ "30 s" [1]: The appliance emits the signal tone repeatedly for 30 seconds.<br>▪ "3 min": The appliance emits the signal tone repeatedly for 3 minutes.<br>"Preheating signal":<br>▪ "On" [1]<br>▪ Off | ▪ Set the volume of the process tones<br>▪ Sets the desired maximum duration of the process tones<br>▪ Activates or deactivates the process tone following preheating |
| | | Visual feedback | ▪ On<br>▪ Off [1] | Switches the pulsating light for program end, notifications or error messages on or off |
| | | Volume reduction | ▪ "On": Lowers the volume for all tones to a certain volume level in a defined period<br>▪ "Reduced": Lowers the volume for all tones to the "Quiet" volume level in a defined period and switches off the tones for cleaning<br>▪ "Off" [1]: Switches off all tones in a defined period<br>Start time<br>▪ "22h" [1]<br>End time<br>▪ "7h" [1] | Sets the lowering of the volume<br>**Note:** The signal tones for warnings, error messages, and switching on and switching off always remain switched on. |
| | Interior lighting | Brightness | ▪ Dark<br>▪ Standard [1]<br>▪ Bright | Sets the brightness of the interior lighting |
| | | Activation | ▪ Automatic [1]<br>▪ Manual | Switches the interior lighting on automatically or manually |
| | | Light interaction | ▪ On [1]<br>▪ Off | Sets the light interaction |

[1] Factory setting (may vary according to model)

| Symbol | Basic setting | Setting | Selection | Use |
|---|---|---|---|---|
| | | | | **Note:** If you are outside of the range that the appliance recognizes, the appliance reduces the interior lighting to what is essential. |
| | Notifications | Info-i | ▪ On [1]<br>▪ Off | Display or hide additional information<br>**Tip:** If you press ❶, the display shows additional information →*Page 16*. If you switch off the function, the display does not show any symbol or any additional information. |
| | | Pop-up hints | ▪ On [1]<br>▪ Off | Displays or hides pop-up notifications →*Page 16* |
| | Language | - | ▪ German<br>▪ French<br>▪ [...]<br>▪ English [1] | Setting the language |
| | Time and units | Time | ▪ Time [1]<br>▪ "Automatic": Select the "Automatic" option if your appliance is connected to Home Connect®. | Set the time |
| | | Time format | ▪ 12<br>▪ 24 [1] | Set the time format |
| | | Temperature unit | ▪ °C [1]<br>▪ °F | Set the temperature unit |
| | | Weight unit | ▪ "Metric": "g/kg"<br>▪ "Imperial": "oz/lb" | Set the weight unit |
| | Advanced | Display Sabbath mode | ▪ On<br>▪ Off [1] | Displays or hides the "Sabbath mode" function |
| | | Demo mode | ▪ On<br>▪ Off [1] | Activates or deactivates demo mode<br>**Note:** The setting is only available in the first 3 minutes after connecting to the power supply. |
| | | Factory settings | ▪ Restore | Resets the appliance to the factory settings<br>**Note:** The appliance starts the initialization. The display asks you to specify settings that the appliance installer has implemented. |

[1] Factory setting (may vary according to model)

| Symbol | Basic setting | Setting | Selection | Use |
|---|---|---|---|---|
| | Appliance | Start screen | ▪ Manual [1]<br>▪ Favorites<br>▪ Programs | Select a display that shows the display after switching on |
| | | Preselection of types of heating | Overview of the available types of heating →*Page 13*. | Selects the preferred types of heating |
| | | | ▪ On<br>▪ Off | ▪ Selects the preferred type of heating that is available after the appliance is switched on<br>▪ If required, displays or hides additional types of heating at a later point<br>**Note:** The sequence of the types of heating is defined. |
| | | Food preference | ▪ Off [1]<br>▪ Vegetarian<br>▪ No meat & poultry<br>▪ No fish & seafood<br>▪ No pork<br>▪ Kosher | Selects the preferred food for automatic programs and recommended settings |
| | | Count-up cooking timer | ▪ On [1]<br>▪ Off | Sets the total cooking time timer<br>**Note:** The running cooking time is automatically counted up if no cooking time has been stored. |
| | | User detection | "Behavior":<br>▪ Automatic<br>▪ "Below 3' 11" (1.2 m)"- "Below 4" (0.1 m)"<br>"Installation height":<br>▪ Under 91.4 cm/36"<br>▪ Between 91.4 cm/ 36" and 150 cm/ 59" [1]<br>▪ Over 150 cm/59" | ▪ Sets the distance from which the proximity sensor detects the user<br>▪ Set the appliance's installation height<br>**Note:** To ensure that the proximity sensor optimally detects the user, store the installation height of the appliance's upper edge. |
| | | Quick heat | ▪ On [1]<br>▪ Off | Switches fast pre-heat on or off |
| | | Catalyzer heating | ▪ On [1]<br>▪ Off | Switches the catalyzer heating →*Page 16* on or off |
| | | Introduction to the appliance | Start | Start the appliance introduction<br>**Note:** The appliance introduction contains a short description of the basic functions. |

[1] Factory setting (may vary according to model)

### 19.2 Changing the basic settings

1. Swipe repeatedly from left to right until the display shows Basic settings →*Page 38*.
✔ The display shows the symbols for the available settings in a ring menu.
2. Use the control ring to select the required basic setting.
3. Press the required basic setting.
✔ The display shows the settings for the selected basic setting.
4. Depending on the selected basic setting, use the control ring to select the setting, or press the required setting.
   ▸ With a list menu, ensure that the required setting is above the horizontal line.
5. Use ⇄ to activate the setting or use the control ring to select the setting option, and press the setting.
6. If required, use < to switch to the previous view.

# 20 Cleaning and maintenance

**Note:** The Statement of Limited Product Warranty covers defects in materials and workmanship. Cleaning and maintenance is not covered by the warranty and a charge will apply. See the Statement of Limited Product Warranty for more details.

### 20.1 Cleaning agents

To avoid damaging the various surfaces on the appliance, do not use any unsuitable cleaning agents.

**⚠ WARNING**
Moisture intrusion may cause an electric shock.
▸ Do not use any steam cleaners or high-pressure cleaners to clean the appliance.

**⚠ WARNING**
The appliance and its parts that can be touched become hot during use.
▸ Caution should be exercised here in order to avoid touching heating elements.
▸ Young children under 8 years of age must be kept away from the appliance.

**⚠ WARNING**
Scratched glass in the appliance door may develop into a crack.
▸ Do not use any harsh or abrasive cleaners or sharp metal scrapers to clean the glass on the appliance door, as they may scratch the surface.

***NOTICE***
Unsuitable cleaning agents damage the surfaces of the appliance.
▸ Do not use harsh or abrasive cleaning agents.
▸ Do not use cleaning agents with a high alcohol content.
▸ Do not use hard scouring pads or cleaning sponges.
▸ Do not use any special cleaners for cleaning the appliance while it is hot.

Salt contained in new sponge cloths may damage surfaces.
▸ Wash new sponge cloths thoroughly before use.

Using oven cleaner in a hot oven cavity damages the stainless steel surfaces.
▸ Never use oven cleaner in the oven cavity when it is still warm.
▸ Remove all food remnants from the oven cavity and the appliance door before you next heat up the appliance.

**⚠ WARNING**
Loose food resides, fat, and meat juices may catch fire.
▸ Remove coarse dirt from the oven cavity and from the accessories.

#### Suitable cleaning agents

Only use cleaning agents that are suitable for the different surfaces on your appliance.

**Appliance door**

| Area | Suitable cleaning agents | Notes |
|---|---|---|
| Door pane | ▪ Glass cleaner | Do not use a glass scraper.<br>Clean it using a soft cloth or a microfiber cloth. |
| Door seal | ▪ Hot soapy water | Clean with a dish cloth.<br>Do not remove or scrub.<br>Do not use metal scrapers or glass scrapers for cleaning. |
| Control ring | ▪ Soapy water | Clean with a slightly damp soft cloth.<br>Do not spray with any cleaning agent. |

**Cooking compartment**

| Area | Suitable cleaning agents | Notes |
|---|---|---|
| Cooking compartment | ▪ Hot soapy water | Clean with a dishcloth and dry with a soft cloth. |

| Area | Suitable cleaning agents | Notes |
|---|---|---|
| Very dirty oven cavity | ▪ Cleaning gel spray for ovens | The cleaning gel spray for ovens can be obtained from customer service or from the online shop.<br>Observe the following information about the cleaning gel spray:<br>▪ The cleaning gel spray must not get into the door opening.<br>▪ Leave this to work for no more than 12 hours.<br>▪ Do not use it on hot surfaces.<br>▪ Rinse off thoroughly with water.<br>▪ Follow the manufacturer's instructions. |
| Glass cover for the oven cavity light | ▪ Hot soapy water | Clean with a dish cloth. |
| Wire rack | ▪ Hot soapy water | In the event of heavy soiling, leave to soak and use a brush.<br>Do not clean in the dishwasher. |
| Accessories | ▪ Dishwasher<br>▪ Hot soapy water | Soak burned-on residues and remove with a brush.<br>Rinse thoroughly with clean water. |
| Core temperature probe | ▪ Hot soapy water | Wipe with a damp cloth<br>Do not clean in the dishwasher. |
| Rotisserie spit | ▪ Hot soapy water | Do not clean the rotisserie spit in the dishwasher.<br>Clean the rotisserie spit with hot soapy water and a soft cloth. After cleaning, dry the rotisserie spit with a soft cloth. |
| Fully extendable telescopic pull-out rack (other accessories) | ▪ Hot soapy water | Clean using a damp dish cloth and dry with a soft cloth. |
| Roaster (special accessory) | ▪ Hot soapy water | Soak and then clean with a dishcloth or scrubbing brush.<br>Do not clean the roaster in the dishwasher. |

## 20.2 Microfiber cloth

The honeycomb microfiber cloth is especially suitable for cleaning easily damaged surfaces, such as glass, glass ceramic, stainless steel or aluminum. The microfiber cloth removes liquid and greasy deposits in one go.
The microfiber cloth can be obtained from customer service or from the online shop.

## 20.3 Removing the shelf supports

The shelf supports can be removed for cleaning. You can also leave the shelf supports fitted in the appliance and clean them with the pyrolytic self-cleaning program.

1. Place a dish towel in the oven cavity to protect the enamel from scratches.
2. Undo the knurled nuts.

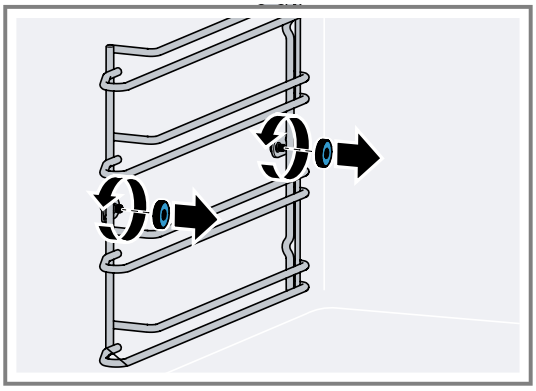

3. Lift the shelf supports slightly sideways away from the screw ① and pull them out towards the front ②.

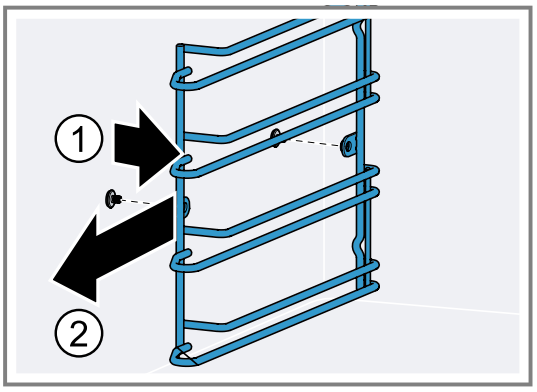


4. Clean the shelf supports with hot soapy water and a soft dish cloth.

## 20.4 Fitting the shelf supports

1. Fit the shelf supports on the correct side of the cooking compartment.
   The shelf supports for the left and right side of the cooking compartment are different.

2. Position the shelf support such that the indentation is located at the rear.

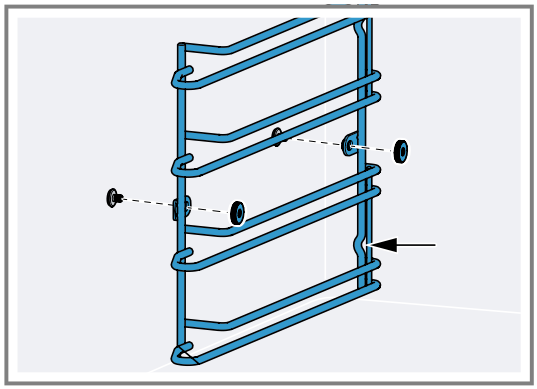

3. Tighten the knurled nuts.

## 20.5 Cleaning the fully extendable telescopic pull-out rack

***NOTICE***

Aggressive cleaners cause damage to the fully extendable telescopic pull-out rack.

- Do not clean the fully extendable telescopic pull-out rack in the dishwasher.
- Do not place the fully extendable telescopic pull-out rack in rinsing water.

The cleaning program causes damage to the fully extendable telescopic pull-out rack.

- Do not clean the fully extendable telescopic pull-out rack using the appliance's cleaning program.

1. Remove the fully extendable telescopic pull-out rack.
2. Use a damp cloth to clean the pull-out rail.
   - Do not remove the lubricant on the pull-out rail.

   It is best to clean the pull-out rail while it is pushed in.

## 20.6 Cleaning the rotisserie spit

1. Do not clean the rotisserie spit, the rotisserie spit drive, the holding clamps and the handle in the dishwasher, but use hot soapy water and a soft cloth for cleaning.

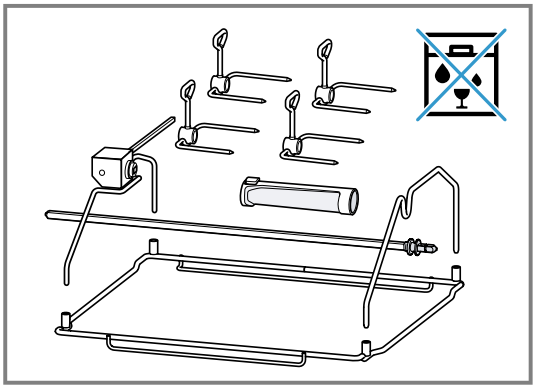

2. After cleaning, dry all parts of the rotisserie spit with a soft cloth.

# 21 Pyrolytic self-cleaning

Follow these safety instructions when using the pyrolytic cleaning function.

**⚠ WARNING**

The appliance gets very hot when the cleaning function is in progress. The non-stick coating on baking trays and tins is destroyed and noxious gases are released.

- Never clean non-stick baking trays or baking tins using the cleaning function.
- Only clean enameled accessories at the same time.

**⚠ WARNING**

The oven cavity gets very hot when the cleaning function is in progress.

- Never open the appliance door.
- Allow the appliance to cool down.
- Keep children away from the appliance.

⚠ The outside of the appliance gets very hot when the cleaning function is in progress.

- Never touch the appliance door.
- Allow the appliance to cool down.
- Keep children away from the appliance.

**⚠ WARNING**

The cleaning function heats up the oven cavity to a very high temperature so that food left over from roasting, grilling and baking is incinerated. This process releases vapors, which can irritate mucous membranes.

- Keep the kitchen well ventilated while the cleaning function is running.
- Do not remain in the room for long periods.
- Keep children and pets away.

**⚠ WARNING**

The oven heats up to a very high temperature during self cleaning. Opening the door can result in injury.

- When self-cleaning, confirm that the door locks and will not open.
- If the door does not lock, do not run Self Clean. Contact Customer Service.

**⚠ CAUTION**

Remove broiler pans, pots, and other utensils and excess spillage before self-cleaning.

When the pyrolytic self-cleaning function is running, the appliance heats up to 905°F (485°C). Residues from roasting, broiling or baking are incinerated. All you have to do is wipe the ash out of the oven cavity.
The total duration of the pyrolytic self-cleaning function comprises the cleaning time and cooling period. Pyrolytic self-cleaning takes around 3 hours. The cooling time is approximately 1 hour. If required, you can delay the pyrolytic self-cleaning switch-off time, e.g. if you want the pyrolytic self-cleaning function to run overnight.

## 21.1 Preparing pyrolytic self-cleaning

**⚠ WARNING**
Loose food resides, fat, and meat juices may catch fire.
- ▸ Before using the cleaning function, always remove the worst of the food residues and remnants from the oven cavity and accessories.

***NOTICE***
Using cleaning agents before the pyrolytic self-cleaning cycle may damage the cooking compartment and the glass on the appliance door.
- ▸ Before the pyrolytic self-cleaning cycle, do not use any cleaning agents in the cooking compartment or on the inside of the appliance door.

1. Wipe the oven cavity with a damp cloth.
2. Wipe the door seal and the insides of the doors.
3. Completely remove all traces of cleaning agents.
4. Remove all loose objects from the oven cavity.
   The shelf supports are pyrolysis-safe.
   → *"Preparing the cleaning of accessories with the pyrolytic self-cleaning function", Page 47*

## 21.2 Preparing the cleaning of accessories with the pyrolytic self-cleaning function

GAGGENAU Baking trays and broiling trays are coated with a pyrolysis-safe enamel. Only clean GAGGENAU baking trays and broiling trays with the pyrolytic self-cleaning function.

**⚠ WARNING**
Loose food resides, fat, and meat juices may catch fire.
- ▸ Before using the cleaning function, always remove the worst of the food residues and remnants from the oven cavity and accessories.

***NOTICE***
The heat during the pyrolytic self-cleaning may damage certain accessories.
- ▸ Do not clean the wire rack, rotisserie spit, cast iron roaster, baking stone, core temperature probe or other accessories using the pyrolytic self-cleaning function.
- ▸ Only clean GAGGENAU baking trays and grill trays with the pyrolytic self-cleaning function.

**Notes**
- Also follow the information for use for the relevant accessory.
- If the oven cavity is extremely dirty, clean the baking tray or grill tray separately.

1. In each case, only slide one baking tray or broiling tray onto the lowest shelf.
2. Slide the baking tray or broiling tray in all the way.

## 21.3 Starting the pyrolytic self-cleaning function

1. Remove all loose objects from the oven cavity and remove coarse dirt.
2. Completely remove any cleaning agent residue.
3. Swipe repeatedly from left to right until the display shows "Modes & Service".

✔ The display shows the available functions in a list menu.

4. Use the control ring to select the "Pyrolytic self-clean" function.
5. Press "Pyrolytic self-clean".
6. Press "Start".
7. If required, delay the end time.
   - ▸ Press the end time.
   - ▸ Use the control ring to set the end time.
   - ▸ Press →.
8. Follow the instructions on the display.
9. Press →.
10. Press ▸ to start.
    - ▸ If required, press ■ to delay the end time.

    The total duration of the pyrolytic self-cleaning function comprises the cleaning time and cooling period. The time for the relevant section of the pyrolytic self-cleaning function counts down on the display.

✔ For your safety, the appliance locks the appliance door. During cooling, the appliance unlocks the door mechanism as soon as the temperature has fallen below 390°F (200°C).
✔ The cleaning time counts down on the display.
✔ If you have delayed the end time, the time until the pyrolytic self-cleaning function starts will count down on the display.
✔ The light in the cooking compartment remains switched off.
✔ A signal tone sounds once the pyrolytic self-cleaning function has ended.
✔ The display shows a message.

11. Once the appliance has cooled down, wipe out the ash that has been left behind in the oven cavity with a damp cloth.
    Depending on the type and degree of soiling, white deposits may remain on the enamel surfaces. These deposits are harmless. They do not affect the function or service life of your appliance.
12. Press ✓ to confirm.

## 21.4 Stopping the pyrolytic self-clean

- ▸ Press ■ on the control ring.

✔ For your safety, the appliance locks the appliance door. During cooling, the appliance unlocks the door mechanism as soon as the temperature has fallen below 390°F (200°C).

# 22 Troubleshooting

You can eliminate minor issues on your appliance yourself. Please read the information on eliminating issues before contacting Customer Service. This may avoid unnecessary repair visits.

**⚠ WARNING**
To avoid risk of injury from improper repairs, observe the following.
- Only qualified technicians or authorized service providers should perform repairs.
- If the power cord of this appliance becomes damaged, it must be replaced by the manufacturer, the manufacturer's Customer Service, or an authorized service provider in order to prevent injury.
- Only genuine spare parts may be used to repair the appliance.
- If the appliance has an issue, call Customer Service.

## 22.1 Malfunctions

| Fault | Cause and troubleshooting |
|---|---|
| The appliance is not working. | The circuit breaker in the circuit breaker panel has tripped.<br>▸ Check the breaker panel. |
| | There has been a power failure.<br>▸ Check whether the lighting in your kitchen or other appliances in the room are working. |
| | Operating error.<br>▸ Switch off the circuit breaker for the appliance in the fuse box and switch it back on after approximately 60 seconds. |
| The appliance does not start. | The appliance door is not fully closed.<br>▸ Close the appliance door. |
| The appliance cannot be started via the Home Connect® app. | The appliance is not connected to the Home Connect® app.<br>▸ Start the connection between the appliance and the Home Connect® app.<br>→ *"Setting up Home Connect®", Page 36* |
| | The appliance is connected to the Home Connect® app but the remote control function is not activated.<br>▸ Activate the remote control function in the Home Connect settings →*Page 37*. |
| The appliance is not working. The display does not respond. The display shows the symbol for the childproof lock 🔒. | Childproof lock is activated.<br>▸ Deactivate the childproof lock. →*Page 27* |
| The appliance automatically switches off. | Safety switch-off function: No operation for more than 12 hours.<br>**1.** Press ✓ to confirm the message.<br>**2.** Switch off the appliance. |
| The appliance does not heat up; the display shows the symbol for the demo mode. | The appliance is in demo mode.<br>▸ Deactivate the demo mode in the basic settings →*Page 38*. |
| The lighting does not work. | The lighting is defective.<br>**1.** Switch off the fuse in the fuse box.<br>**2.** Switch the fuse on after approx. 10 seconds.<br>**3.** If the malfunction occurs again, call customer service. |

## 22.2 Display information

| Fault | Cause and troubleshooting |
|---|---|
| The display shows the error message "Exx". | An error occurred.<br>**1.** If the display shows an error message, press ⏻.<br>✔ If the display no longer shows the error message, it was a one-off problem.<br>**2.** If the display continues to show or repeatedly shows the error message, contact customer service →*Page 51* and provide them with the error code. |
| Display shows "Initialization". | The initial start-up was not completed successfully.<br>▸ Carry out initial start-up.<br>→ *"Initial use", Page 19* |
| | The appliance's factory settings were restored.<br>▸ Carry out initial start-up.<br>→ *"Initial use", Page 19* |
| | Demo mode was activated during initial start-up and has now been deactivated.<br>▸ Carry out initial start-up.<br>→ *"Initial use", Page 19* |

### 22.3 Demo mode

If the display shows ⚒, demo mode is activated. The appliance does not heat up.

#### Deactivating demo mode

1. To briefly disconnect the appliance from the mains, switch off the household fuse or the circuit breaker in the fuse box.
2. Deactivate demo mode within 3 minutes in the basic settings →*Page 38*.

## 23 Disposal

### 23.1 Disposal of your old appliance

Environmentally compatible disposal allows valuable raw materials to be recycled.

- Dispose of the appliance in an environmentally responsible manner.
  Information about current disposal methods can be obtained from your specialist dealer or local authority.

## 24 How it works

Here, you can find the ideal settings for various types of food as well as the best accessories and cookware. We have perfectly tailored these recommendations to your appliance.
You can find recommended settings →*Page 32* for some meals in the display under Programs →*Page 31* or in the Home Connect® app.
The following overview only contains standard dishes for test purposes.

### 24.1 General cooking tips

Take note of the following information when cooking all types of food.

- Always preheat the appliance. This will produce the best cooking results. The cooking times specified refer to a preheated appliance.
- The cooking times specified are intended as a guide. The actual cooking time depends on the quality and temperature of the food before cooking, as well as its weight and thickness.
- If you have not made a particular dish before, start with the shortest specified time. If required, you can continue to cook the food.
- A lower temperature results in more even browning. If necessary, set a higher temperature.
- The values given refer to average quantities for 4 people. If you want to prepare a larger amount, expect a longer cooking time.
- Use the cookware specified. If you use other cookware, cooking times may be longer or shorter.
- You can use any heat-resistant cookware. Place the ovenware in the center of the wire rack. For large roasts, you can also use the broiling tray or glass tray.
- To ensure optimal heat circulation, do not position the wire racks and baking trays too closely.
- To prepare bulky food items, you can remove the shelf supports at both sides.
- Place the rack directly onto the bottom of the cooking compartment and place the food or roaster onto the rack. Do not place the food or roaster directly onto the bottom of the oven cavity. If required, remove the shelf supports. →*Page 45*
- Open the oven cavity door on the preheated oven for a short time only and quickly place your food inside the appliance.
- Always use plates, baking tins or ovenproof dishes with the wire rack.
- "Economy convection" type of heating:
  Energy-saving hot air mode for cakes, meat, bakes, and gratins. Optimal use is made of the residual heat. Convenience functions remain switched off (e.g. the interior lighting). The interior oven temperature can only be displayed while the appliance is heating up. Do not preheat the oven. Make sure that the oven cavity is cold and that there is nothing already in there when you place the food inside. Then start the specified cooking time. Always keep the appliance door closed when cooking. This prevents heat loss.
- "Broiler" and "Broil + circulated air":
  With these operating modes, there may be a temperature difference between the temperature you have set and the actual temperature inside the oven. This is because broiling and browning are fast cooking processes that require high temperatures. Consequently, for browning and roasting, a higher temperature than is actually needed on the surface of the food is selected.

#### Vegetables

Take note of the recommended settings for vegetables.

- Oven-roasted or oven-baked vegetables are a good alternative to pan-fried vegetables. The different flavors become more concentrated and, because the vegetables are roasted, they have a very distinctive taste. In addition, very little fat is required to prepare the vegetables.
- Clean and prepare the vegetables, and mix them with a little oil in a bowl. Place them in a heat-resistant dish or in the glass tray or broiling tray and spread them out evenly.
- Mix them thoroughly at least once during the cooking process. Once they are cooked, season them, and sprinkle them with fresh herbs to taste.
- Vegetables are good as a hot or cold appetizer, or vegetarian main course, or as an accompaniment to meat and fish.

- For small portions (for 2-3 people), use a heat-resistant dish and place it on the wire rack. If you use the glass tray or broiling tray, the food will start to burn or dry out.
- A follow the manufacturer's instructions for pre-cooked and frozen products, too.

## Fish

Take note of the recommended settings for fish.

- For food hygiene reasons, ensure that fish has a core temperature of at least 62-70 °C after cooking. This is also the ideal cooking temperature.
- Do not season the fish with salt until it is fully cooked. This ensures that the natural flavor is maintained and that less water is drawn out of the fish.
- Use a small amount of oil to grease the wire rack or baking tray so that the fish does not stick to it.
- For fillets with skin: Place the fish on the rack or tray with the skin side up – this helps to hold the fish together and maintain its flavor.
- Shorten the wooden skewers or, before skewering the ingredients, leave the skewers to soak in water overnight to prevent them from charring.
- A follow the manufacturer's instructions for pre-cooked and frozen products, too.

## Poultry

Take note of the recommended settings for poultry.

- The cooking times listed are intended as a guide only and depend heavily on the temperature of the meat at the start of cooking. For better results, use the core temperature probe. Insert the core temperature probe between the belly and the thigh, rather than in the middle or in a cavity. Further information and instructions, as well as optimal target temperatures, can be found in the section entitled Core temperature probe →*Page 33*.
- Poultry will turn out particularly crispy and brown if you baste it towards the end of the roasting time with butter, salted water, drained fat, or orange juice.
- When cooking duck or goose, pierce the skin underneath the wings to allow the fat to run out.
- Use a roaster or another heat-resistant baking dish or tin for dishes that involve adding a lot of liquid to the roast. The same applies if a lot of fat is likely to drain from the food, e.g. roast goose.

## Meat

Take note of the recommended settings for meat.

- The cooking times listed are intended as a guide only and depend heavily on the temperature of the meat at the start of cooking and on how long the meat was seared for. For better results, use the core temperature probe. Information and instructions, as well as optimal target temperatures, can be found in the section entitled Core temperature probe →*Page 33*.
- Time to rest: Allow the meat to rest for 5-15 minutes on a wire rack after cooking. This gives the meat a chance to "relax". The circulation of the meat juice slows and, when the meat is cut, less juice is lost. Large pieces of meat, such as roasts, can rest in the oven. Smaller ones, e.g. steaks, should rest outside the oven wrapped in aluminum foil.
- For small portions (2-3 people), use a heat-resistant pan so that the food does not burn or dry out.
- Use the broiling tray or roaster for a large joint of meat, and for preparation methods that involve adding a lot of liquid to the joint.
- For best results, leave meat to marinate overnight and remove it before roasting or grilling, e.g. using the back of a knife or a spoon. Otherwise, the spices and herbs will burn.
- If the joint of meat has become too dark in color and the skin is burned in places, reduce the set temperature the next time you cook a joint, and check the rack level.
- If the joint is cooked but the sauce is slightly burnt, use a smaller roaster the next time you cook a joint, and add more liquid. If the sauce is too watery, use a larger roaster and add less liquid.

## Side dishes and meals

Take note of the recommended settings for side dishes and meals.

- The best known oven-cooked side dishes are potato-based, such as potato gratin. However, you can also obtain excellent results when oven-cooking side dishes that are normally pan-fried, e.g. potato pancakes or fried potatoes. The advantages of this preparation method: You can prepare relatively large quantities of food at the same time, the cooking smells do not spread so far in the room, and the food can be prepared using less fat.
- Another highly versatile oven-cooked side dish is cheese. It is a very good addition to vegetarian dishes in particular; depending on the preparation method, you can also serve cheese as an appetizer or finger food.
- Grilled dishes such as bakes and gratins are particularly well suited to being prepared in the oven. Dishes with a dough or pastry base, e.g. pizza and savoury flan, and egg dishes with a filling, e.g. tortillas, are also suitable.
- For small portions (for 2-3 people), use a heat-resistant dish and place it on the wire rack. If you use the glass tray or broiling tray, the food will start to burn or dry out.
- A follow the manufacturer's instructions for pre-cooked and frozen products, too.

## Baked goods

Note the recommended settings for baked items.

- We recommend using dark-colored metal baking tins as these absorb heat more effectively. Place the baking tin in the center of the wire rack.
- If you are baking tray bakes without baking parchment, lightly grease the baking tray beforehand.
- Small baked items, e.g. cream puffs, cookies and puff pastry parcels, can be baked on 2 levels, 1+3.
- If you are baking on more than one level, it is normal for food on baking trays placed in the oven at the same time to be ready at different times. Leave the food on the baking trays lower down in the oven to cook for a little longer, or place them in the appliance earlier next time.
- Before cutting the baked items, leave them to cool on a wire rack.

- If the baked items are too dark on the bottom, place them a level up and select a lower temperature. If the baked items are too dark on the top, place them a level down, select a lower temperature, and extend the baking time a little.
- If the cake is too dry, set the temperature a little higher. If the cake remains uncooked in the middle, set a lower temperature.
  Baking times cannot be reduced by setting a higher temperature; it is better to set the temperature a little lower.
- If the cake collapses, use less liquid or set the temperature 10 °C lower. Do not open the oven door too soon.
- If the cake only rises in the middle, grease the sides of the baking tin.
- Do not remove the cookies from the baking tray; place the baking tray back into the hot oven for a short period and remove the cookies whilst they are still hot.
- If the cake does not come away from the tin when you are trying to turn it out, carefully slide a knife around the sides to loosen it. Turn the cake tin upside down again and cover it several times with a cold, wet cloth. Next time, grease the tin well and sprinkle some bread crumbs into it.
- A follow the manufacturer's instructions for pre-cooked and frozen products, too.

### Desserts

Note the recommended settings for desserts.

- Oven-cooked desserts are very easy to prepare – all that remains is to put them in the oven. This preparation method is useful for relatively large quantities, for example if you have guests.
- Oven-cooked desserts are generally eaten hot, and are very enjoyable particularly during the colder months.

# 25 Customer Service

With any warranty repair, we will make sure your appliance is repaired by an authorized service provider using genuine replacement parts. We use only genuine replacement parts for all repairs.
You can obtain function-relevant and storable genuine spare parts from our Customer Service for up to 15 years from the date on which your appliance was placed on the market.
For more information, please contact our Customer Service team.
Detailed information on the warranty period and terms of warranty can be found in the Statement of Limited Product Warranty, from your retailer, or on our website.
The LED light sources are available as a spare part and should only be replaced by an authorized service provider.
USA:
1-877-442-4436
*www.gaggenau.com*
*www.gaggenau.com/us/appliances/eshop*
CA:
1-877-442-4436
*www.gaggenau.com*
*www.gaggenau.ca*
For assistance with connecting to Home Connect®, you can also view instructions here:
www.home-connect.com/us/en/help-support/set-up

## 25.1 Model number (E-Nr.), production number (FD) and consecutive numbering (Z-Nr.)

If you contact Customer Service, you will need the product number (E-Nr.), production number (FD), and consecutive numbering (Z-Nr.), which you can find on the appliance's rating label.

Making a note of your appliance's details and the Customer Service telephone number will enable you to find them again quickly.

## 25.2 Rating plate location

The rating plate is located at the door frame close to the lower door hinge.

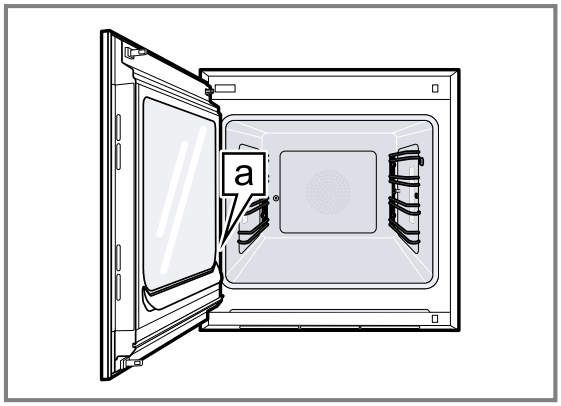


a Rating plate

# 26 Information regarding Free and Open Source Software

This product includes software components that are licensed by the copyright holders as free or open source software.
The applicable license information is stored on your home appliance. You can also access the applicable license information via your Home Connect® app: "Profile -> Legal information -> License Information".[1] You can also download the license information on the brand product website. (Please search on the product website for your appliance model and additional documents). Alternatively, you can request the relevant information from ossrequest@bshg.com or BSH Hausgeräte GmbH, Carl-Wery-Str. 34, 81739 Munich, Germany.
The relevant source code will be made available to you on request.
Please send your request to ossrequest@bshg.com or BSH Hausgeräte GmbH, Carl-Wery-Str.34, 81739 Munich, Germany.
Subject: „OSSREQUEST“
The cost of performing your request will be charged to you. This offer is valid for three years from the date of purchase or at least as long as we offer support and spare parts for the relevant appliance.

# 27 STATEMENT OF LIMITED PRODUCT WARRANTY

## 27.1 What this warranty covers & Who it applies to

The limited warranty provided by BSH Home Appliances (“Gaggenau“) in this Statement of Limited Product Warranty applies only to the Gaggenau appliance sold to you (“Product“), provided that the Product was purchased on or after January 1, 2025:

- For your normal, household (non-commercial) use, and has in fact at all times only been used for normal household purposes.
- New at retail from a BSH authorized dealer or directly from BSH (not a display, "as is", or previously returned model), and not for resale, or commercial use.
- Within the United States or Canada, and has at all times remained within the country of original purchase.

The warranties stated herein apply to the original purchaser of the product warranted herein and to each succeeding owner of the product purchased for ordinary home use during the term of the warranty.
Please make sure to register your Product; while not necessary to effectuate warranty coverage, it is the best way for Gaggenau to notify you in the unlikely event of a safety notice or product recall.

## 27.2 How long the warranty lasts

Gaggenau warrants that the Product is free from defects in materials and workmanship for a period of five (5) years from the date of the original delivery. The warranty shall only be extended for the time that elapsed between the date of your warranty claim and the date of the completed repair or replacement. This Product is also warranted to be free from **cosmetic** defects in material and workmanship (such as scratches of stainless steel, paint/porcelain blemishes, chips, dents, or other damage to the finish) of the Product, for a period of sixty (60) days from the date of delivery or closing date for new construction. This **cosmetic** warranty excludes slight color variations due to inherent differences in painted and porcelain parts, as well as differences caused by kitchen lighting, product location, or other similar factors. This **cosmetic** warranty specifically excludes any display, floor, “As Is”, or “B” stock appliances.

## 27.3 Repair/replace as your exclusive remedy

During this warranty period, Gaggenau or one of its authorized service providers will repair your Product without charge to you (subject to certain limitations stated herein) if your Product proves to have been manufactured with a defect in materials or workmanship. If reasonable attempts to repair the Product have been made without success, then Gaggenau will replace your Product (upgraded models may be available to you, in Gaggenau's sole discretion, for an additional charge). Nothing in this warranty requires damaged or defective parts to be replaced with parts of a different type or design than the original parts. All removed parts and components shall become the property of Gaggenau at its sole option. All replaced and/or repaired parts shall assume the identity of the original part for purposes of this warranty and this warranty shall not be extended with respect to such parts. Gaggenau's sole liability and responsibility hereunder is to repair manufacturer-defective Product only, using a Gaggenau authorized service provider during normal business hours. For safety and property damage concerns, Gaggenau highly recommends that you do not attempt to repair the Product yourself, or use a non-authorized service provider; Gaggenau will have no responsibility or liability for damage resulting from repairs or work performed by a non-authorized service provider. Authorized service providers are those persons or companies that have been specially trained on Gaggenau products, and who possess, in Gaggenau's opinion, a superior reputation for customer service and technical ability (note that they are independent entities and are not agents, partners, affiliates or representatives of Gaggenau). Nevertheless, taking your product to be serviced by a repair shop that is not affiliated with or an authorized dealer of Gaggenau will not void this warranty. Also, using third-party

[1] Depending on the appliance specifications

parts will not void this warranty. Notwithstanding the foregoing, Gaggenau will not incur any liability, or have responsibility, for the Product if it is located in a remote area (more than 100 miles from an authorized service provider) or is reasonably inaccessible, hazardous, threatening, or treacherous locale, surroundings, or environment; in any such event, if you request, Gaggenau would still pay for labor and parts and ship the parts to the nearest authorized service provider, but you would still be fully liable and responsible for any travel time or other special charges by the service company, assuming they agree to make the service call. Further, to the extent you have installed the Product in a difficult-to-access location or have otherwise installed temporary or permanent fixtures that create barriers to accessing or removing the Product, Gaggenau will not incur any liability for, or have responsibility, for work or costs associated with moving the Product or otherwise creating access to the Product in order to repair or replace it. All such costs shall be your sole responsibility.

## 27.4 Out of warranty product

Gaggenau is under no obligation, at law or otherwise, to provide you with any concessions, including repairs, prorates, or Product replacement, once this warranty has expired.

## 27.5 Warranty exclusions

The warranty coverage described herein excludes all defects or damage that are not the direct fault of Gaggenau, including without limitation, one or more of the following:

- Use of the Product in anything other than its normal, customary and intended manner (including without limitation, any form of commercial use, use or storage of an indoor product outdoors, use of the Product in conjunction with air or water-going vessels).
- Any party's willful misconduct, negligence, misuse, abuse, accidents, neglect, improper operation, failure to maintain, improper or negligent installation, tampering, failure to follow operating instructions, mishandling, unauthorized service (including selfperformed "fixing" or exploration of the appliance's internal workings).
- Adjustment, alteration or modification of any kind.
- A failure to comply with any applicable state, local, city, or county electrical, plumbing and/or building codes, regulations, or laws, including failure to install the product in strict conformity with local fire and building codes and regulations.
- Ordinary wear and tear, spills of food, liquid, grease accumulations, or other substances that accumulate on, in, or around the Product.
- Any external, elemental and/or environmental forces and factors, including without limitation, rain, wind, sand, floods, fires, mud slides, freezing temperatures, excessive moisture or extended exposure to humidity, lightning, power surges, structural failures surrounding the appliance, and acts of God.
- Service calls to correct the installation of your Product, to instruct you how to use your Product, to replace house fuses or correct house wiring or plumbing.
- Removal and replacement of trim or decorative panels that interfere with servicing the Product.
- Damage or defects caused by labor or parts installed by any non-authorized service provider, unless approved by Gaggenau before service is performed.

In no event shall Gaggenau have any liability or responsibility whatsoever for damage to surrounding property, including cabinetry, floors, ceilings, and other structures or objects around the Product. Also excluded from this warranty are Products, on which the serial numbers have been altered, defaced, or removed; service visits to teach you how to use the Product, or visits where there is nothing wrong with the Product; correction of installation problems (you are solely responsible for any structure and setting for the Product, including all electrical, plumbing or other connecting facilities, for proper foundation/flooring, and for any alterations including without limitation cabinetry, walls, floors, shelving, etc.); and resetting of breakers or fuses.
TO THE EXTENT ALLOWED BY LAW, THIS WARRANTY SETS OUT YOUR EXCLUSIVE REMEDIES WITH RESPECT TO PRODUCT, WHETHER THE CLAIM ARISES IN CONTRACT OR TORT (INCLUDING STRICT LIABILITY, OR NEGLIGENCE) OR OTHERWISE. THIS WARRANTY IS IN LIEU OF ALL OTHER WARRANTIES, WHETHER EXPRESS OR IMPLIED. ANY WARRANTY IMPLIED BY LAW, WHETHER FOR MERCHANTABILITY OR FITNESS FOR A PARTICULAR PURPOSE, OR OTHERWISE, SHALL BE EFFECTIVE ONLY FOR THE PERIOD THAT THIS EXPRESS LIMITED WARRANTY IS EFFECTIVE. IN NO EVENT WILL THE MANUFACTURER BE LIABLE FOR CONSEQUENTIAL, SPECIAL, INCIDENTAL, INDIRECT, "BUSINESS LOSS", AND/OR PUNITIVE DAMAGES, LOSSES, OR EXPENSES, INCLUDING WITHOUT LIMITATION TIME AWAY FROM WORK, HOTELS AND/OR RESTAURANT MEALS, REMODELLING EXPENSES IN EXCESS OF DIRECT DAMAGES WHICH ARE DEFINITIVELY CAUSED EXCLUSIVELY BY GAGGENAU, OR OTHERWISE. SOME STATES DO NOT ALLOW THE EXCLUSION OR LIMITATION OF INCIDENTAL OR CONSEQUENTIAL DAMAGES, AND SOME STATES DO NOT ALLOW LIMITATIONS ON HOW LONG AN IMPLIED WARRANTY LASTS, SO THE ABOVE EXCLUSIONS OR LIMITATIONS MAY NOT APPLY TO YOU. THIS WARRANTY GIVES YOU SPECIFIC LEGAL RIGHTS, AND YOU MAY ALSO HAVE OTHER RIGHTS WHICH VARY FROM STATE TO STATE.
No attempt to alter, modify or amend this warranty shall be effective unless authorized in writing by an officer of BSH.

## 27.6 Obtaining warranty service

To obtain warranty service for your product, you should contact Gaggenau Customer Support at 1-877-442-4436 to schedule a repair.

## 27.7 Product information

For handy reference, copy the information below from the rating plate. Keep your invoice and/or delivery documents for warranty validation.

| | |
|---|---|
| Model number (E-Nr.) | |

| |
|---|
| Production number (FD) |
| Date of delivery |

# Recursos y ayuda en línea en español

Muchos manuales están disponibles en línea en inglés, francés y español.
Para acceder a manuales de modelos específicos y otros documentos en español:

- Visite *www.gaggenau.com/us/for-owners/use-and-care-manuals* o escanee el código QR.

- Introduzca el número de producto (E-Nr.) que encontrará en la placa de características del aparato.
- Seleccione o descargue el manual o documento que desee.

The difference is Gaggenau

gaggenau.com

**BSH Home Appliances Corporation**
1901 Main Street, Suite 600
Irvine, CA 92614
USA
www.gaggenau.com
1-877-442-4436
© 2026 BSH Home Appliances Corporation

**9001954219** (060710)
en-us