WS 463 710
Stainless steel-backed glass front
Width 24" (60 cm), Height 8 3/16" (21 cm)

Installation accessories
BA 476 510
Optional handle, stainless steel
Length 17 11/16".

400 series convection warming drawer
WS 463

- Handleless warming drawer
- Perfect for a side-by-side combination of 30" single oven and 24" Combi-steam oven, speed microwave oven or a 24" espresso machine
- Bright interior lighting
- Soft-closing system
- Hygienic stainless steel interior with glass bottom
- 4 temperature levels ranging from 100°F – 175°F
- Keeps food and drinks warm, also for preparing and cooking meals
- Net volume 1.0 cu.ft.

Cooking modes
Defrosting of meals/proofing of yeast dough.
Preheating of small beverages.
Keeping meals warm/slow cooking.
Warming of dishes.

Operation
Rotary knob operation.
Recessed grip at the front bottom center of drawer.

Features
Usable interior dimensions:
H 5 5/16" × W 18 11/16" × D 18 1/16"
Volume capacity: Dinner set for 8 people including ø 9 1/2" plates and soup bowls, additional bowls and serving dishes depending on size.
Integrated base glass plate heating for easy cleaning.
Convection fan for even heat distribution.
Status display, visible in the glass front.
Base plate made of safety glass.
Max. load 33 lbs.

Planning notes
The front of the appliance extends 1 7/8" from the cabinet front.
Always use an intermediate shelf – at least 3/4" thick – when mounting a 400 series single oven/Combi-steam oven above the WS 463 warming drawer.
When mounting the drawer below the 400 series Combi-steam oven, plan a recess of at least 1 3/8" between the back wall and the warming drawer to allow for the inlet and outlet hose to be installed appropriately.
The electric outlet can be planned behind the appliance.

Please read the installation details regarding air openings on pages 12 – 13.

Rating
Total rating: 0.81 kW.
Total Amps: 10 A.
120 V / 60 Hz
Connecting cable 6' with plug.

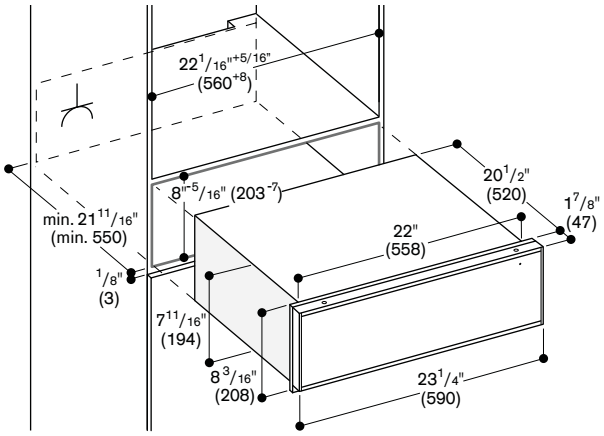

Side view of WS 463 below BS Combi-steam oven, BM speed microwave oven or CM espresso machine

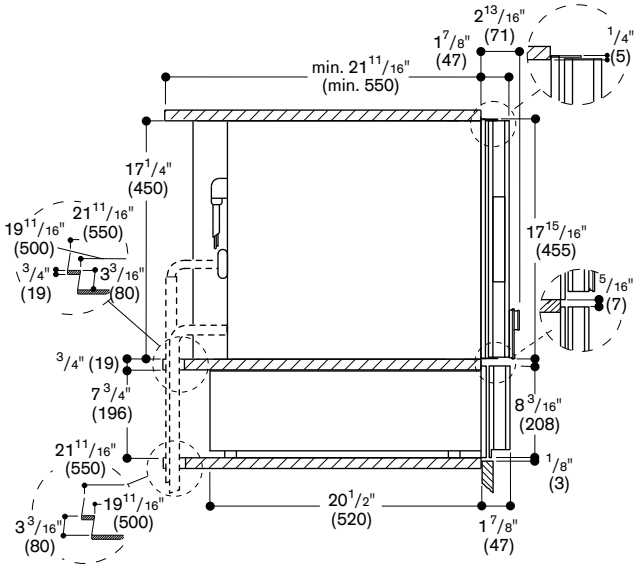

Numbers indicated
inside parenthesis ( ) = mm