RB 492 701
Two-door bottom freezer
with integrated ice maker
Fully integrated
Width: 36"

Included accessories
1 ice scoop
1 egg holder with lid

Required installation accessories
RA 460 000
Installation kit for side-by-side installation (for connecting any two columns) Side-by-side kit comes already attached to all RF freezers and RW wine units
RA 460 010
Heating kit if columns are not attached (in separate niches) and less than 6" apart

Installation accessories
RA 423 910
Cladding set in stainless steel
Transforms RB/RY 492 into free-standing unit. Door panels and toe-kicks must be ordered separately.
(W 37 13/16" / H 84 5/8" / D 24 13/16")
RA 425 110
Long stainless steel handle for fresh food door, length 44 1/2", with three brackets, drilling distance between each mount 21 13/16"
RA 425 910
Short stainless steel handle for freezer drawer, length 31 7/8", with two brackets, drilling distance between the mounts 31"
RA 460 030
Connecting element for vertically split appliance fronts
(for bottom freezer combination)
RA 421 910
Stainless steel door panels with handles
Panel thickness 3/4".
RA 461 910
Ventilation grill
Stainless steel

LEARN MORE AT energystar.gov

Two-door bottom freezer
RB 492

- Stainless steel interior
- Generous LED lighting concept
- Solid aluminum door bins
- Net volume 19.7 cu.ft.
- Integrated automatic ice maker with fixed water connection in the freezer drawer
- One motorized glass shelf, adjustable when fully loaded
- One asymmetrically split glass shelf
- Fully extendable freezer drawer with practical divider
- ENERGY STAR® qualified
- Star-K certified

Operation
Electronic precision temperature control with digital temperature display.

Technical features
Dynamic cool air distribution with Multi-Flow Air System.
Automatic defrosting with defrost water evaporation.
Activated charcoal air filter.
Energy-saving vacation mode.
Open-door and malfunction warning system.

Cooling compartment
Net volume 14.3 cu. ft.
No-frost technology with fast cooling.
Temperature adjustable from 35°F to 46°F (+2°C to +8°C).
2 safety glass shelves, 1 of which is motorized.
1 asymmetrically split safety glass shelf, manually adjustable.
2 fully extendable drawers with transparent front.
Bright interior lighting with LED sidewall pillars.
2 height adjustable door bins, one large gallon door bin.
1 door bin with transparent front flap.

Temperature controlled drawer
Net volume 0.9 cu. ft.
No-frost technology.
1 continuous, fully extendable temperature controlled drawer close to 32F with transparent front, manually controllable.

Freezer compartment
Net volume 5.8 cu. ft.
No-frost technology with fast freezing.
Temperature adjustable from 7°F to -9°F (-14°C to -25°C).
2 fully extendable drawers.
Interior lighting with two spot lights.
Freezing capacity 51 lbs./24h.
Storage time after malfunction 22h.

Ice dispenser
Integrated automatic ice maker in the freezer compartment, with fixed water connection.
Ice maker can be switched off independently.
Ice cube production approx. 3.1 lbs. (1.4 kg)/24 h.
Removable ice storage bin with approx. 4.4 lbs. (2 kg) capacity.

Planning notes
Flat hinge.
Door hinge right, reversible.
Door opening angle of 115°, optional 90° door stop.

Max. door panel weight:
Door 77 lbs.
Drawer 22 lbs.
Requires custom toe-kick.
Shut-off valve for water connection must be planned next to the appliance and always be accessible.
If the water pressure exceeds 116 psi, connect pressure relief valve between water tap and hose set.
Cold water connection required.
Electrical location 6" above ground in lower left corner of unit.
Water pressure 29 to 116 psi.

For details, please refer to the refrigeration planning guide on pages 167–183.

Consumption data
Energy consumption 1.238 kWh/24 h.; annually: 452 kWh
Noise level 41 dB.

Rating
Total rating 0.588 kW.
Total Amps: 15 A.
120 V / 60 Hz
Connecting cable 78 3/4" with plug.
Supply hose 118" with 3/4" connection.

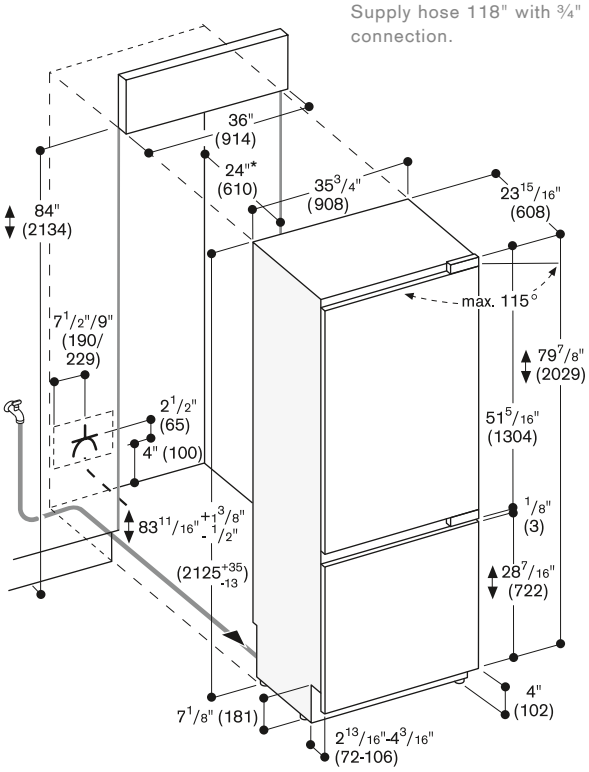

The door face dimensions are designed for a maximum gap of 1/8" (3 mm).
* For a flush-mounted appearance, the minimum cut-out depth must be 25". See more details on pages 170 and 177.

Numbers indicated inside parenthesis ( ) = mm