DV 463 710
Stainless steel-backed glass front
Width 24" (60cm), Height 8 3/16" (21cm)

Included accessories
1 vacuuming bag, small (50 pcs.)
1 vacuuming bag, big (50 pcs.)
1 raised vacuuming platform
1 adapter for vacuuming outside the chamber
1 vacuuming hose
1 adapter for bottle plugs
3 plugs for vacuuming of bottles

Installation accessories
BA 476 510
Optional handle, stainless steel
Length 17 5/8".

Optional accessories
BA 080 670
Vacuuming bags, small
7" x 11", 100 pcs.
BA 080 680
Vacuuming bags, large
9 1/2" x 14", 100 pcs.

400 series vacuuming drawer
DV 463

- Integrable in 8 3/16" high niche
- Hygienic stainless steel vacuuming chamber, applicable height up to 3 5/32"
- 3 vacuuming levels for vacuuming in the chamber, max. 99%
- 3 vacuuming levels for vacuuming outside the chamber, max. 90%
- Automatic connection recognition for vacuuming outside the chamber
- Handleless drawer
- Soft-closing system
- Net volume 0.25 cu.ft.

Application
Vacuuming for sous-vide cooking.
Vacuuming for fast marinating and flavoring.
Vacuuming for extended storage.
Vacuuming of vacuuming containers outside the chamber.
Resealing bottles outside the chamber.

Operation
Touch key operation.
Recessed grip at the front bottom of the drawer.

Features
Capacity load max. 22 lbs.
Maximum size of vacuuming bags W 9 1/2" x L 14".
3 heat-sealing levels for different strengths of bag material.
Sealing bar, non-stick coating, removable.
Safety glass cover, opens automatically after vacuuming.
Raised vacuuming platform, 1 3/4", deployable.
Utility space in vacuuming chamber, W 8 1/4" x L 10 3/4".
Membrane for avoiding reflow of liquids during vacuuming outside the chamber.
Drying program for vacuuming pump.
Warning function.

Planning notes
The panel surface of the appliance extends 1 7/8" from the furniture cavity.
Installation of BS Combi-steam oven/ BM speed microwave oven/CM espresso machine directly above DV vacuuming drawer in 24" niche without a partition shelf in between.
Built-in under worktop or in single niche.
The electric outlet can be planned behind the appliance.

Please read the installation details regarding air ducting on page 12 – 13.

Rating
Total rating: 0.32 kW.
Total Amps: 5 A.
120 V / 60 Hz
Connecting cable 6' with plug.

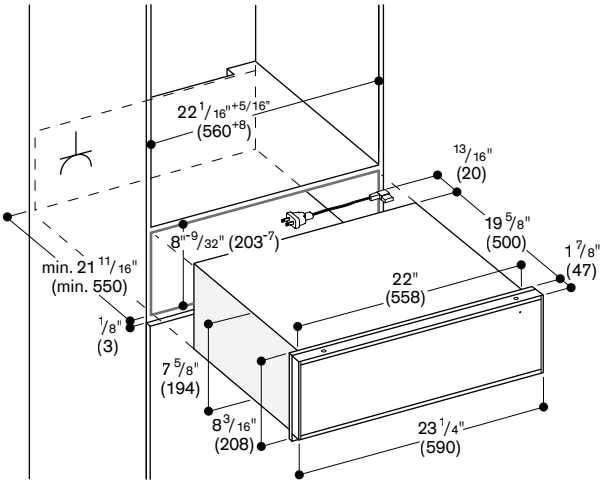

Side view of DV 463 below BS Combi-steam oven, BM speed microwave oven, CM espresso machine

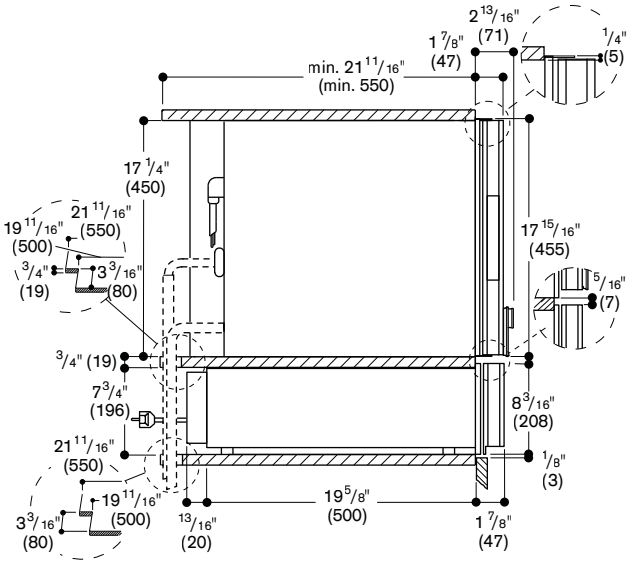

Numbers indicated
inside parenthesis ( ) = mm